APA PRODUCT REPORT®

www.apawood.org

LP® SmartSide® Strand Substrate **PR-N124**
Treated-Engineered-Wood Lap, Panel, and Vertical Siding
Louisiana-Pacific Corporation Revised July 2, 2020

Product: LP® SmartSide® Strand Substrate Treated-Engineered-Wood Lap, Panel, and Vertical Siding

Louisiana-Pacific Corporation, 414 Union Street, Suite 2000, Nashville, TN 37219
(800) 450-6106
www.lpcorp.com

1. Basis of the product report:
   - 2018, 2015, 2012, and 2009 International Building Code: Section 104.11 Alternative materials
   - 2018, 2015, 2012, and 2009 International Residential Code: Section R104.11 Alternative materials
   - ANSI/AWC SDPWS-2015 Special Design Provisions for Wind and Seismic
   - ASCE 7-16, ASCE 7-10, and ASCE 7-05 Minimum Design Loads for Buildings and Other Structures
   - APA PRP-108 Performance Standards and Qualification Policy for Structural-Use Panels
   - NES Evaluation Protocol for Determination of Flood-Resistance Properties of Building Elements
   - APA Reports R&D 87Q-1, T87Q-45, T91Q-11, T91Q-20, T97Q-4, T97Q-10, T98Q-13, T98Q-17, T99Q-23, T2008Q-12, T2008P-73, T2008P-74, T2009Q-54, T2011Q-59, T2012P-22, T2015Q-38, T2015Q-39, T2017P-03, and T2018P-05, and other qualification data.

2. Product description:
   Louisiana-Pacific Corporation (LP®) SmartSide® Strand Substrate Treated-Engineered-Wood Lap, Panel, and Vertical Siding is overlaid with a resin treated paper and is available with either a smooth or embossed surface texture. The siding is treated with Zinc Borate for decay and insect resistance. The efficacy of the preservative treatment of the LP SmartSide siding is outside the scope of this report and the APA certification program. All edges are factory sealed with a primer.

   LP SmartSide lap siding is available in 3/8 and 7/16 Performance Categories, in nominal widths of 5, 6, 7, 8, 9-1/2, and 12 inches and in lengths up to 16 feet. The lap siding may be installed horizontally or vertically.

   LP SmartSide panel siding is available in 3/8, 7/16 and 19/32 Performance Categories, 4 feet in width, and up to 18 feet in length. The 3/8 Performance Category panels are available without grooves or with grooves spaced 8 inches on center. The 7/16 and 19/32 Performance Category panels are available without grooves or with grooves spaced either 4 or 8 inches on center. Minimum thicknesses at the groove and shiplap are documented in the plant Quality Manual.

   LP SmartSide Vertical Siding is a narrow width panel siding and is available in 3/8 Performance Category, nominal width of 16 inches, and in 16-foot lengths. The vertical siding can only be installed vertically.

3. Design properties:
   Allowable racking shear values for LP SmartSide Strand Substrate panel siding are listed in Table 1. For 3/8 Performance Category panels nailed at shiplap edges, use 5/16

© 2020 APA - The Engineered Wood Association

Performance Category shear values. For 7/16 and 19/32 Performance Category panel sidings nailed at shiplap edges, use 3/8 Performance Category shear values. Design wind loads for LP SmartSide Strand Substrate lap and panel siding are listed in Tables 2 and 3, respectively. Design wind loads for LP SmartSide Strand Substrate lap and panel siding when installed over the facer of structural insulated panels (SIPs) and wood structural panel (WSP) sheathing are listed in Tables 4 and 5, respectively. Design wind loads for LP SmartSide Strand Substrate Vertical Siding and lap siding applied vertically are listed in Table 6.

4. Product installation:
LP SmartSide Strand Substrate Treated-Engineered-Wood Lap, Panel, and Vertical Siding shall be installed in accordance with recommendations provided by the manufacturer (www.lpcorp.com/products/siding/lp-smartside-trim-siding/) and APA *Engineered Wood Construction Guide*, Form E30 (www.apawood.org/resource-library), as applicable. The maximum span shall be in accordance with the Span Rating shown in the trademark. The LP SmartSide Strand Substrate lap and panel siding shall be permitted to be installed over the facer of structural insulated panels (SIPs) and WSP sheathing in accordance with Tables 4 and 5, respectively.

LP SmartSide lap siding, when installed vertically, shall be installed over a minimum 7/16 Performance Category wood structural panel sheathing meeting DOC PS1 or DOC PS2 requirements, and shall be covered by a batten at the siding joint or shall be overlapped with another vertical lap siding in accordance with the recommendations provided by the manufacturer, as shown in Figures 1 through 4. Lap siding installed vertically can only span one floor plate-to-plate. Each vertical application shall not span beyond one floor to ceiling distance, or one floor to top of gable distance.

LP SmartSide Vertical Siding shall be installed over a minimum 7/16 Performance Category wood structural sheathing meeting DOC PS1 or DOC PS2 requirements, and shall be covered by a batten at the panel joint in accordance with the recommendations provided by the manufacturer, as shown in Figures 2, 5, and 6. Vertical Siding can only span one floor plate-to-plate. Each vertical application shall not span beyond one floor to ceiling distance, or one floor to top of gable distance.

5. Fire-resistant construction:
Wood structural panels that are not fire-retardant-treated have been shown to meet a Class III (or C) category for flame spread. Unless otherwise specified, fire-resistant construction shall be in accordance with the recommendations in APA *Fire-Rated Systems*, Form W305 (see link above).

6. Flood resistance evaluation:
Selected properties critical to flood resistance of 3/8 and 7/16 Performance Category panel siding, including uniform loads, concentrated static loads, concentrated hard body and soft body impact loads, fastener performance, wall racking resistance, edge thickness swell, linear expansion, hygroscopicity, exterior bond performance and large panel and small specimen bending properties were evaluated at a 16 o.c. Span Rating in accordance with *NES Evaluation Protocol for Determination of Flood-Resistance Properties of Building Elements*. Test results in the dry (as-received) condition and after moisture cycling in accordance with the NES protocol were compared to the requirements specified in ICC Evaluation Service (ICC-ES) *Acceptance Criteria for Treated-Engineered-Wood Siding* (AC321).

7. Limitations:
   a) LP SmartSide Strand Substrate Treated-Engineered-Wood Lap, Panel, and Vertical Siding used outdoors must be finished in accordance with recommendations provided

by the manufacturer (see link above) and APA *Engineered Wood Construction Guide*, Form E30 (see link above).

b) The efficacy of the preservative treatment of the LP SmartSide siding is outside the scope of this report and the APA certification program.

c) LP SmartSide Strand Substrate Treated-Engineered-Wood panel siding is flood resistant on the properties listed in Section 6. This evaluation applies to 3/8 and 7/16 Performance Category panel siding at a 16 o.c. Span Rating.

d) LP SmartSide Strand Substrate Treated-Engineered-Wood Lap and Panel Siding is produced at Louisiana-Pacific Corporation facilities at Dawson Creek, BC, Hayward, WI, Newberry, MI, Tomahawk, WI, Two Harbors, MN, and Swan Valley, MB, and LP SmartSide Strand Substrate Treated-Engineered-Wood Vertical Siding is produced at Louisiana-Pacific Corporation facility at Tomahawk, WI, under a quality assurance program audited by APA.

e) This report is subject to re-examination in one year.

8. Identification:
LP SmartSide Strand Substrate Treated-Engineered-Wood Lap, Panel, and Vertical Siding described in this report is identified by a label bearing the manufacturer's name (Louisiana-Pacific Corporation) and/or trademark, the APA assigned plant number (402 for the Dawson Creek, BC plant, 357 for the Hayward, WI plant, 416 for the Newberry, MI plant, 435 for the Tomahawk, WI plant, 399 for the Two Harbors, MN plant, or 457 for the Swan Valley, MB plant), the product Performance Category, the Span Rating, the Exposure Rating, the APA logo, the report number PR-N124, and a means of identifying the date of manufacture.

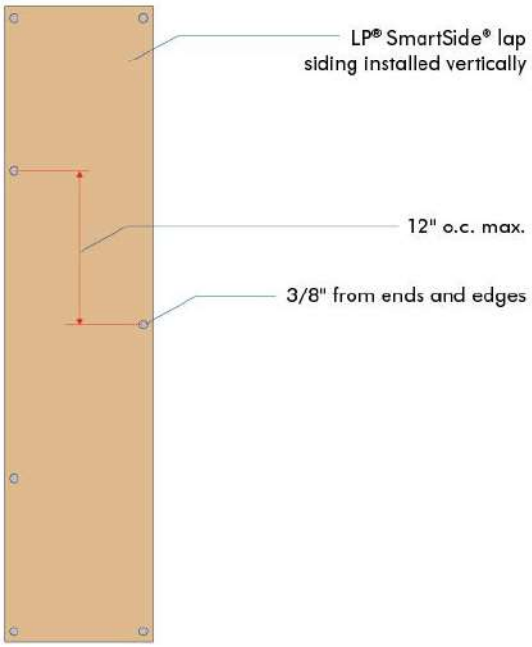

Figure 1. Lap siding installed vertically

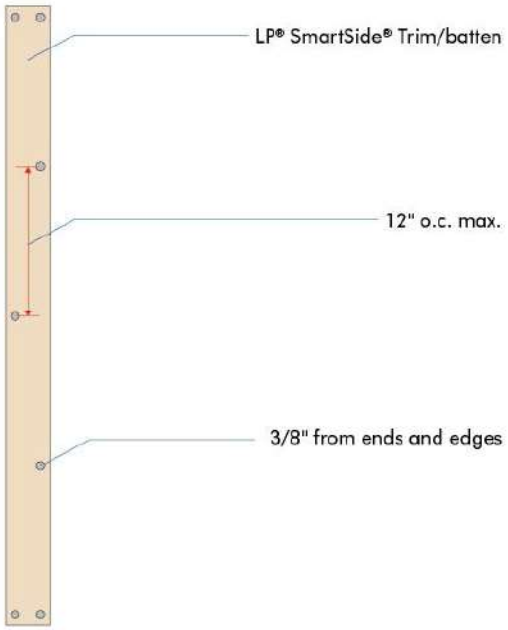

Figure 2. LP SmartSide Trim/Batten

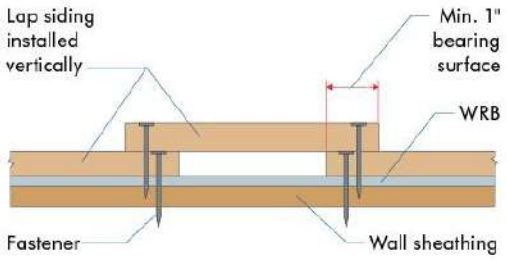

Figure 3. Lap siding attachment detail

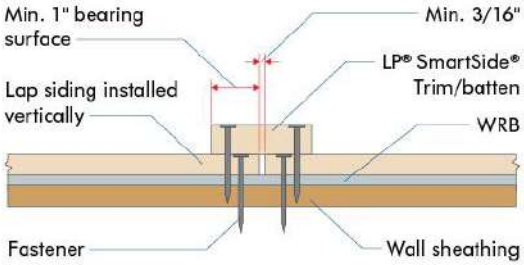

Figure 4. LP SmartSide Trim/Batten attachment detail

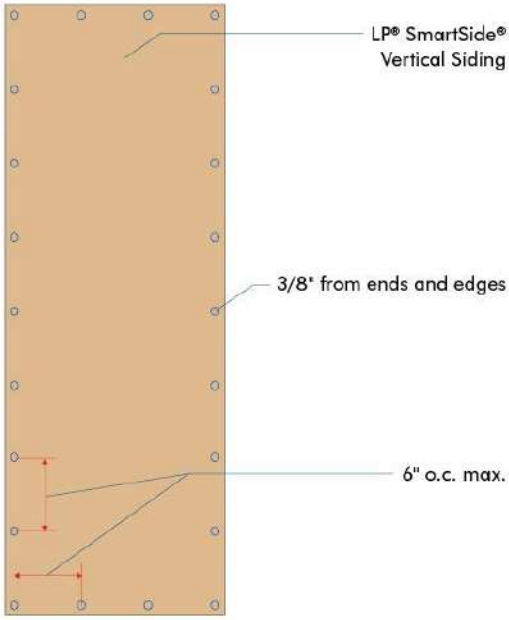

Figure 5. Vertical Siding

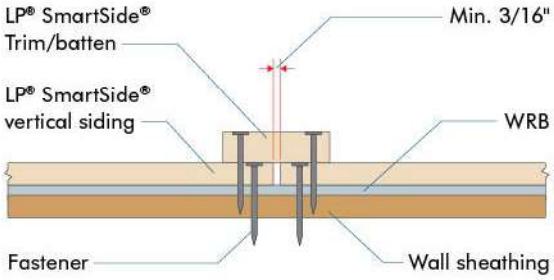

Figure 6. Vertical Siding attachment detail

Table 1. Allowable Racking Shear (plf) for LP SmartSide Strand Substrate Treated-Engineered-Wood Panel Siding Shear Walls with Framing of Douglas-Fir-Larch or Southern Pine for Wind or Seismic Loading[1,2,3]

Performance Category	Min. Nail Penetration in Framing (inches)	Panels Applied Directly to Framing					Panels Applied Over Max. 5/8-inch Gypsum Sheathing				
		Nail Size (common or galvanized box)[7,8]	Nail Spacing at Panel Edges (inches)				Nail Size (common or galvanized box)[7,8]	Nail Spacing at Panel Edges (inches)			
			6	4	3	2[4]		6	4	3	2[4]
5/16[5,6]	1-1/4	6d	180	270	350	450	8d	180	270	350	450
3/8[5,6]			200	300	390	510		200	300	390	510
3/8[5,6]	1-1/2	8d	220	320	410	530	10d	260	380	490[4]	640
7/16[5]			240	350	450	585		260	380	490[4]	640
19/32[5]	1-5/8	10d	340	510	665[4]	870	-	-	-	-	-

For **SI**: 1 inch = 25.4 mm, 1 plf = 14.6 N/m.

(1) For framing of other species: (a) find specific gravity for species of lumber in the National Design Specification for Wood Construction (NDS); (b) find shear value from table for nails size; (c) multiply value by 0.82 for species with specific gravity greater than or equal to 0.42 but less than 0.49, or 0.65 for species with specific gravity less than 0.42.

(2) All panel edges must be backed with 2-inch nominal or wider framing. Panels must be installed with the long dimension oriented in the vertical direction. Space nails 6 inches o.c. along intermediate framing members for 3/8 and 7/16 Performance Category panels installed on studs spaced 24 inches o.c. For other conditions and panel performance categories, space nails 12 inches o.c. on intermediate supports.

(3) For shear loads of normal or permanent load duration, the values in the table shall be multiplied by 0.63 or 0.56, respectively. For wind load applications, the values in the table shall be permitted to be multiplied by 1.4.

(4) Framing at panel edges must be 3 inches nominal or wider and nails must be staggered where nails are spaced 2 inches o.c., and where 10d nails having penetration into framing of more than 1-5/8 inches are spaced 3 inches or less, o.c. **Exception:** Unless otherwise required, 2-inch nominal framing may be used where full nailing surface is available and nails are staggered.

(5) Except as noted in Footnote 7, panel thickness at point of nailing at panel edges determines applicable shear values, except that 3/8 Performance Category panels nailed at shiplap edges use 5/16 Performance Category shear values, and 7/16 and 19/32 Performance Category panel sidings nailed at shiplap edges use 3/8 Performance Category shear values.

(6) Shiplap edges must be double-nailed; one nail must be placed in the underlap and a second nail must be placed in the overlap at the nail spacing specified for the applicable shear value.

(7) Fasteners must not be installed in panel siding grooves in the field of the panel siding or when the panel siding grooves occur at cut edges of the panel siding.

(8) Fastener dimensions are as specified in ASTM F1667.

© 2020 APA - The Engineered Wood Association

Table 2a. Lap Siding Installed Horizontally with 0.113" Nails[1] – **Max. Allowable Wind Speed, V_{asd}[2]**

Performance Category	Max. Stud Spacing[3] (inches)	Siding Width (inches)	Max. Allowable Wind Pressure (psf)	Max. Allowable Wind Speed, V_{asd}[4] (mph) Wind Exposure Category		
				B	C	D
3/8	16	5	80	170	150	140
		6	80	170	150	140
		7	80	170	150	140
		8	74	170	145	130
		9.5	61	150	130	120
		12	47	130	110	105
7/16	16	6	80	170	150	140
		7	80	170	150	140
		8	74	170	145	130
		9.5	65	150	130	125
		12	47	130	110	105
	24	6	69	150	140	130
		7	58	150	130	110
		8	49	140	120	110
		9.5	41	125	105	100
		12	31	110	90	85

For **SI**: 1 inch = 25.4 mm, 1 psf = 47.88 Pa, 1 mph = 0.447 m/s.

(1) Fasteners shall be permitted to be substituted on a one-for-one basis if the fastener has a minimum overall allowable withdrawal capacity and allowable fastener head pull-through capacity of 62 lbf/fastener or greater based on the load duration factor of 1.6. The fastener shall meet or exceed the corrosion-resistance of hot-dipped galvanized steel wire nails meeting the requirements of ASTM A153, Class D.

(2) One fastener for each stud located 3/4 inch from the top edge of the siding. Each successive course of lap siding must overlap a minimum of 1 inch. Fasteners shall be a hot dipped galvanized plain (smooth) shank nail, with a minimum shank diameter of 0.113 inch, and long enough to penetrate structural framing or wood structural panels and structural framing a minimum of 2 inches. **Lap siding is not a bracing material.**

(3) Wall studs must have a minimum specific gravity of 0.42.

(4) Three-second-gust; based on wind pressures acting toward and away from building surfaces, at 30-ft height in Zone 5 with smallest effective area in accordance with Chapter 6 of ASCE 7-05, Section R301.2.1 of the 2009 and 2012 IRC, and Section 1609.1.1 of the 2009 IBC.

Table 2b. Lap Siding Installed Horizontally with 0.113" Nails[1] – **Max. Ultimate Wind Speed, V_{ult}[2]**

Performance Category	Max. Stud Spacing[3] (inches)	Siding Width (inches)	Max. Ultimate Wind Pressure (psf)	Max. Ultimate Wind Speed, V_{ult}[4] (mph)		
				Wind Exposure Category		
				B	C	D
3/8	16	5	133	200[5]	180	180
		6	133	200[5]	180	180
		7	133	200[5]	180	180
		8	123	200[5]	180	160
		9.5	102	200[5]	160	150
		12	79	180	150	140
7/16	16	6	133	200[5]	180	180
		7	133	200[5]	180	180
		8	123	200[5]	180	160
		9.5	102	200[5]	160	150
		12	79	180	150	140
	24	6	115	200[5]	180	160
		7	96	180	160	150
		8	85	180	150	140
		9.5	68	160	140	130
		12	52	140	120	110

For **SI**: 1 inch = 25.4 mm, 1 psf = 47.88 Pa, 1 mph = 0.447 m/s.

(1) Fasteners shall be permitted to be substituted on a one-for-one basis if the fastener has a minimum overall allowable withdrawal capacity and allowable fastener head pull-through capacity of 62 lbf/fastener or greater based on the load duration factor of 1.6. The fastener shall meet or exceed the corrosion-resistance of hot-dipped galvanized steel wire nails meeting the requirements of ASTM A153, Class D.

(2) One fastener for each stud located 3/4 inch from the top edge of the siding. Each successive course of lap siding must overlap a minimum of 1 inch. Fasteners shall be a hot dipped galvanized plain (smooth) shank nail, with a minimum shank diameter of 0.113 inch, and long enough to penetrate structural framing or wood structural panels and structural framing a minimum of 2 inches. **Lap siding is not a bracing material.**

(3) Wall studs must have a minimum specific gravity of 0.42.

(4) Three-second-gust; based on wind pressures acting toward and away from building surfaces, at 30-ft height in Zone 5 with smallest effective area in accordance with Chapter 26 of ASCE 7-16 and ASCE 7-10, Section R301.2.1 of the 2018 and 2015 IRC, and Section 1609.1.1 of the 2018, 2015, and 2012 IBC.

(5) Table R301.2(2) of the 2018 and 2015 IRC is limited to a maximum ultimate design wind speed, V_{ult}, of 180 mph.

Table 2c. Lap Siding Installed Horizontally with 0.092" Nails – **Max. Allowable Wind Speed, V_{asd}**[1]

Performance Category	Max. Stud Spacing[2] (inches)	Siding Width (inches)	Max. Allowable Wind Pressure (psf)	Max. Allowable Wind Speed, V_{asd}[3] (mph) Wind Exposure Category		
				B	C	D
3/8	16	5	78	170	150	130
		6	63	150	130	125
		7	52	145	120	110
		8	45	130	110	105
		9.5	37	120	100	90
		12	28	105	90	-
7/16	16	6	63	150	130	125
		7	52	145	120	110
		8	45	130	110	105
		9.5	37	120	100	90
		12	28	105	90	-
	24	6	42	130	110	100
		7	35	120	100	90
		8	30	110	90	85
		9.5	25	100	85	-
		12	19	85	-	-

For **SI**: 1 inch = 25.4 mm, 1 psf = 47.88 Pa, 1 mph = 0.447 m/s.

(1) One fastener for each stud located 3/4 inch from the top edge of the siding. Each successive course of lap siding must overlap a minimum of 1 inch. Fasteners shall be a hot dipped galvanized plain (smooth) shank nail, with a minimum shank diameter of 0.092 inch, and long enough to penetrate structural framing or wood structural panels and structural framing a minimum of 1.5 inches. **Lap siding is not a bracing material.**

(2) Wall studs must have a minimum specific gravity of 0.42.

(3) Three-second-gust; based on wind pressures acting toward and away from building surfaces, at 30-ft height in Zone 5 with smallest effective area in accordance with Chapter 6 of ASCE 7-05, Section R301.2.1 of the 2009 and 2012 IRC, and Section 1609.1.1 of the 2009 IBC.

Table 2d. Lap Siding Installed Horizontally with 0.092" Nails – **Max. Ultimate Wind Speed, V_{ult}**[1]

Performance Category	Max. Stud Spacing[2] (inches)	Siding Width (inches)	Max. Ultimate Wind Pressure (psf)	Max. Ultimate Wind Speed, V_{ult}[3] (mph) Wind Exposure Category		
				B	C	D
3/8	16	5	131	200[4]	180	180
		6	104	200[4]	160	160
		7	87	180	160	140
		8	75	160	140	130
		9.5	61	150	130	120
		12	47	140	115	-
7/16	16	6	104	200[4]	160	160
		7	87	180	160	140
		8	75	160	140	130
		9.5	61	150	130	120
		12	47	140	115	-
	24	6	70	160	140	130
		7	58	150	130	120
		8	50	140	120	110
		9.5	41	130	110	-
		12	32	110	-	-

For **SI**: 1 inch = 25.4 mm, 1 psf = 47.88 Pa, 1 mph = 0.447 m/s.

(1) One fastener for each stud located 3/4 inch from the top edge of the siding. Each successive course of lap siding must overlap a minimum of 1 inch. Fasteners shall be a hot dipped galvanized plain (smooth) shank nail, with a minimum shank diameter of 0.092 inch, and long enough to penetrate structural framing or wood structural panels and structural framing a minimum of 1.5 inches. **Lap siding is not a bracing material.**

(2) Wall studs must have a minimum specific gravity of 0.42.

(3) Three-second-gust; based on wind pressures acting toward and away from building surfaces, at 30-ft height in Zone 5 with smallest effective area in accordance with Chapter 26 of ASCE 7-16 and ASCE 7-10, Section R301.2.1 of the 2018 and 2015 IRC, and Section 1609.1.1 of the 2018, 2015, and 2012 IBC.

(4) Table R301.2(2) of the 2018 and 2015 IRC is limited to a maximum ultimate design wind speed, V_{ult}, of 180 mph.

Table 3a. Panel Siding Installed Vertically with 0.113" Nails – **Max. Allowable Wind Speed, V_{asd}**

Performance Category	Max. Stud Spacing[2] (inches)	Fastener Spacing[1] (inches o.c.)		Max. Allowable Wind Pressure (psf)	Max. Allowable Wind Speed, V_{asd}[3] (mph)		
					Wind Exposure Category		
		Edges	Field		B	C	D
3/8	16	6	12	43	130	110	100
			6	80	170	150	140
	24	6	12	29	105	90	-
			6	58	150	130	110
7/16	16	6	12	43	130	110	100
			6	80	170	150	140
	24	6	12	29	105	90	-
			6	58	150	130	110
19/32	16	6	12	43	130	110	100
			6	80	170	150	140
	24	6	12	29	105	90	-
			6	58	150	130	110

For **SI**: 1 inch = 25.4 mm, 1 psf = 47.88 Pa, 1 mph = 0.447 m/s.

(1) Fasteners shall be a hot dipped galvanized plain (smooth) shank nail, with a minimum shank diameter of 0.113 inch, and long enough to penetrate structural framing or wood structural panels and structural framing a minimum of 2 inches.

(2) Wall studs must have a minimum specific gravity of 0.42.

(3) Three-second-gust; based on wind pressures acting toward and away from building surfaces, at 30-ft height in Zone 5 with smallest effective area in accordance with Chapter 6 of ASCE 7-05, Section R301.2.1 of the 2009 and 2012 IRC, and Section 1609.1.1 of the 2009 IBC.

Table 3b. Panel Siding Installed Vertically with 0.113" Nails – **Max. Ultimate Wind Speed, V_{ult}**

Performance Category	Max. Stud Spacing[2] (inches)	Fastener Spacing[1] (inches o.c.)		Max. Ultimate Wind Pressure (psf)	Max. Ultimate Wind Speed, V_{ult}[3] (mph)		
					Wind Exposure Category		
		Edges	Field		B	C	D
3/8	16	6	12	72	160	140	130
			6	133	200[4]	180	180
	24	6	12	48	140	115	-
			6	96	180	160	150
7/16	16	6	12	72	160	140	130
			6	133	200[4]	180	180
	24	6	12	48	140	115	-
			6	96	180	160	150
19/32	16	6	12	72	160	140	130
			6	133	200[4]	180	180
	24	6	12	48	140	115	-
			6	96	180	160	150

For **SI**: 1 inch = 25.4 mm, 1 psf = 47.88 Pa, 1 mph = 0.447 m/s.

(1) Fasteners shall be a hot dipped galvanized plain (smooth) shank nail, with a minimum shank diameter of 0.113 inch, and long enough to penetrate structural framing or wood structural panels and structural framing a minimum of 2 inches

(2) Wall studs must have a minimum specific gravity of 0.42.

(3) Three-second-gust; based on wind pressures acting toward and away from building surfaces, at 30-ft height in Zone 5 with smallest effective area in accordance with Chapter 26 of ASCE 7-16 and ASCE 7-10, Section R301.2.1 of the 2018 and 2015 IRC, and Section 1609.1.1 of the 2018, 2015, and 2012 IBC.

(4) Table R301.2(2) of the 2018 and 2015 IRC is limited to a maximum ultimate design wind speed, V_{ult}, of 180 mph.

Table 3c. Panel Siding Installed Vertically with 0.092" Nails – **Max. Allowable Wind Speed, V_{asd}**

Performance Category	Max. Stud Spacing[2] (inches)	Fastener Spacing[1] (inches o.c.)		Max. Allowable Wind Pressure	Max. Allowable Wind Speed, V_{asd}[3] (mph)		
					Wind Exposure Category		
		Edges	Field		B	C	D
3/8	16	6	12	26	100	85	-
			6	52	145	120	110
	24	6	12	17	85	-	-
			6	35	120	100	90
7/16	16	6	12	26	100	85	-
			6	52	145	120	110
	24	6	12	17	85	-	-
			6	35	120	100	90
19/32	16	6	12	26	100	85	-
			6	52	145	120	110
	24	6	12	17	85	-	-
			6	35	120	100	90

For **SI**: 1 inch = 25.4 mm, 1 psf = 47.88 Pa, 1 mph = 0.447 m/s.

(1) Fasteners shall be a hot dipped galvanized plain (smooth) shank nail, with a minimum shank diameter of 0.092 inch, and long enough to penetrate structural framing or wood structural panels and structural framing a minimum of 1.5 inches. **Configuration cannot be used for lateral bracing due to nail size.**

(2) Wall studs must have a minimum specific gravity of 0.42.

(3) Three-second-gust; based on wind pressures acting toward and away from building surfaces, at 30-ft height in Zone 5 with smallest effective area in accordance with Chapter 6 of ASCE 7-05, Section R301.2.1 of the 2009 and 2012 IRC, and Section 1609.1.1 of the 2009 IBC.

Table 3d. Panel Siding Installed Vertically with 0.092" Nails – **Max. Ultimate Wind Speed, V_{ult}**

Performance Category	Max. Stud Spacing[2] (inches)	Fastener Spacing[1] (inches o.c.)		Max. Ultimate Wind Pressure (psf)	Max. Ultimate Wind Speed, V_{ult}[3] (mph)		
					Wind Exposure Category		
		Edges	Field		B	C	D
3/8	16	6	12	44	130	110	-
			6	87	180	160	140
	24	6	12	29	-	-	-
			6	58	150	130	120
7/16	16	6	12	44	130	110	-
			6	87	180	160	140
	24	6	12	29	-	-	-
			6	58	150	130	120
19/32	16	6	12	44	130	110	-
			6	87	180	160	140
	24	6	12	29	-	-	-
			6	58	150	130	120

For **SI**: 1 inch = 25.4 mm, 1 psf = 47.88 Pa, 1 mph = 0.447 m/s.

(1) Fasteners shall be a hot dipped galvanized plain (smooth) shank nail, with a minimum shank diameter of 0.092 inch, and long enough to penetrate structural framing or wood structural panels and structural framing a minimum of 1.5 inches. **Configuration cannot be used for lateral bracing due to nail size.**

(2) Wall studs must have a minimum specific gravity of 0.42.

(3) Three-second-gust; based on wind pressures acting toward and away from building surfaces, at 30-ft height in Zone 5 with smallest effective area in accordance with Chapter 26 of ASCE 7-16 and ASCE 7-10, Section R301.2.1 of the 2018 and 2015 IRC, and Section 1609.1.1 of the 2018, 2015, and 2012 IBC.

(4) Table R301.2(2) of the 2018 and 2015 IRC is limited to a maximum ultimate design wind speed, V_{ult}, of 180 mph.

Table 4a. Lap Siding Installed Horizontally to SIPs[1] or WSP Sheathing[5] – **Max. Allowable Wind Speed, V_{asd}[2]**

Minimum Performance Category	Max. Ring Shank Nail Spacing[3] (inches)	Siding Width (inches)	Max. Allowable Wind Pressure (psf)	Max. Allowable Wind Speed, V_{asd}[4] (mph)		
				Wind Exposure Category		
				B	C	D
3/8	8	5	80	170	150	140
		6	80	170	150	140
		7	80	170	150	140
		8	80	170	150	140
		9.5	77	170	150	130
		12	60	150	130	120
3/8	12	5	80	170	150	140
		6	80	170	150	140
		7	73	170	145	130
		8	62	150	130	125
		9.5	51	145	120	110
		12	40	125	105	90

For **SI**: 1 inch = 25.4 mm, 1 psf = 47.88 Pa, 1 mph = 0.447 m/s.

(1) The facer of the structural insulated panels (SIPs) shall be 7/16 Performance Category or thicker OSB sheathing meeting DOC PS2 requirements.

(2) The tabulated values represent the capacity of the LP Lap Siding installed in accordance with the requirements of this table. **The tabulated wind speed shall not exceed the SIP capacity for wind load resistance**.

(3) Fasteners shall be a hot dipped galvanized ring shank nail, with a minimum shank diameter of 0.092 inch. Length shall be long enough to fully penetrate wood structural facer panel. One ring shank fastener located 3/4 inch from the top edge of the siding. Each successive course of lap siding must overlap a minimum of 1 inch.

(4) Three-second-gust; based on wind pressures acting toward and away from building surfaces, at 30-ft height in Zone 5 with smallest effective area in accordance with Chapter 6 of ASCE 7-05, Section R301.2.1 of the 2009 and 2012 IRC, and Section 1609.1.1 of the 2009 IBC.

(5) Wood structural panel (WSP) sheathing shall be minimum 7/16 Performance Category OSB or Group 1 plywood meeting DOC PS1 or DOC PS2 requirements.

Table 4b. Lap Siding Installed Horizontally to SIPs[1] or WSP Sheathing[6] – **Max. Ultimate Wind Speed, V_{ult}[2]**

Minimum Performance Category	Max. Ring Shank Nail Spacing[3] (inches)	Siding Width (inches)	Max. Ultimate Wind Pressure (psf)	Max. Ultimate Wind Speed, V_{ult}[4] (mph)		
				Wind Exposure Category		
				B	C	D
3/8	8	5	133	200[5]	180	180
		6	133	200[5]	180	180
		7	133	200[5]	180	180
		8	133	200[5]	180	180
		9.5	129	200[5]	180	170
		12	99	200[5]	170	150
3/8	12	5	133	200[5]	180	180
		6	133	200[5]	180	180
		7	121	200[5]	180	170
		8	104	200[5]	170	160
		9.5	86	180	150	140
		12	66	160	140	120

For **SI**: 1 inch = 25.4 mm, 1 psf = 47.88 Pa, 1 mph = 0.447 m/s.

(1) The facer of the structural insulated panels (SIPs) shall be 7/16 Performance Category or thicker OSB sheathing meeting DOC PS2 requirements.

(2) The tabulated values represent the capacity of the LP Lap Siding installed in accordance with the requirements of this table. **The tabulated wind speed shall not exceed the SIP capacity for wind load resistance**.

(3) Fasteners shall be a hot dipped galvanized ring shank nail, with a minimum shank diameter of 0.092 inch. Length shall be long enough to fully penetrate wood structural facer panel. One ring shank fastener located 3/4 inch from the top edge of the siding. Each successive course of lap siding must overlap a minimum of 1 inch.

(4) Three-second-gust; based on wind pressures acting toward and away from building surfaces, at 30-ft height in Zone 5 with smallest effective area in accordance with Chapter 26 of ASCE 7-16 and ASCE 7-10, Section R301.2.1 of the 2018 and 2015 IRC, and Section 1609.1.1 of the 2018, 2015, and 2012 IBC.

(5) Table R301.2(2) of the 2018 and 2015 IRC is limited to a maximum ultimate design wind speed, V_{ult}, of 180 mph.

(6) Wood structural panel (WSP) sheathing shall be minimum 7/16 Performance Category OSB or Group 1 plywood meeting DOC PS1 or DOC PS2 requirements.

Table 5a. Panel Siding Installed Vertically to SIPs[1] or WSP Sheathing[5] – **Max. Allowable Wind Speed, V_{asd}[2]**

Performance Category	Maximum Ring Shank Nail Spacing[3] (inches o.c.)		Maximum Allowable Wind Pressure (psf)	Max. Allowable Wind Speed, V_{asd}[4] (mph)		
				Wind Exposure Category		
	Vertical	Horizontal		B	C	D
3/8	8	8	80	170	150	140
	10	10	52	145	120	110
	12	12	36	120	100	90
	16	16	20	90	-	-
7/16	8	8	80	170	150	140
	10	10	52	145	120	110
	12	12	36	120	100	90
	16	16	20	90	-	-
19/32	8	8	80	170	150	140
	10	10	52	145	120	110
	12	12	36	120	100	90
	16	16	20	90	-	-

For **SI**: 1 inch = 25.4 mm, 1 psf = 47.88 Pa, 1 mph = 0.447 m/s.

(1) The facer of the structural insulated panels (SIPs) shall be 7/16 Performance Category or thicker OSB sheathing meeting DOC PS2 requirements.

(2) The tabulated values represent the capacity of the LP Panel Siding installed in accordance with the requirements of this table. **The tabulated wind speed shall not exceed the SIP capacity for wind load resistance**.

(3) Fasteners shall be a hot dipped galvanized ring shank nail, with a minimum shank diameter of 0.092 inch. Length shall be long enough to fully penetrate wood structural facer panel. Ring shank nails fastened in a grid as specified.

(4) Three-second-gust; based on wind pressures acting toward and away from building surfaces, at 30-ft height in Zone 5 with smallest effective area in accordance with Chapter 6 of ASCE 7-05, Section R301.2.1 of the 2009 and 2012 IRC, and Section 1609.1.1 of the 2009 IBC.

(5) Wood structural panel (WSP) sheathing shall be minimum 7/16 Performance Category OSB or Group 1 plywood meeting DOC PS1 or DOC PS2 requirements.

Table 5b. Panel Siding Installed Vertically to SIPs[1] or WSP Sheathing[6] – **Max. Ultimate Wind Speed, V_{ult}[2]**

Performance Category	Maximum Ring Shank Nail Spacing[3] (inches o.c.)		Maximum Ultimate Wind Pressure (psf)	Max. Allowable Wind Speed, V_{ult}[4] (mph)		
				Wind Exposure Category		
	Vertical	Horizontal		B	C	D
3/8	8	8	133	200[5]	180	180
	10	10	87	180	160	140
	12	12	61	150	130	120
	16	16	34	120	-	-
7/16	8	8	133	200[5]	180	180
	10	10	87	180	160	140
	12	12	61	150	130	120
	16	16	34	120	-	-
19/32	8	8	133	200[5]	180	180
	10	10	87	180	160	140
	12	12	61	150	130	120
	16	16	34	120	-	-

For **SI**: 1 inch = 25.4 mm, 1 psf = 47.88 Pa, 1 mph = 0.447 m/s.

(1) The facer of the structural insulated panels (SIPs) shall be 7/16 Performance Category or thicker OSB sheathing meeting DOC PS2 requirements.

(2) The tabulated values represent the capacity of the LP Panel Siding installed in accordance with the requirements of this table. **The tabulated wind speed shall not exceed the SIP capacity for wind load resistance**.

(3) Fasteners shall be a hot dipped galvanized ring shank nail, with a minimum shank diameter of 0.092 inch. Length shall be long enough to fully penetrate wood structural facer panel. Ring shank nails fastened in a grid as specified.

(4) Three-second-gust; based on wind pressures acting toward and away from building surfaces, at 30-ft height in Zone 5 with smallest effective area in accordance with Chapter 26 of ASCE 7-16 and ASCE 7-10, Section R301.2.1 of the 2018 and 2015 IRC, and Section 1609.1.1 of the 2018, 2015, and 2012 IBC.

(5) Table R301.2(2) of the 2018 and 2015 IRC is limited to a maximum ultimate design wind speed, V_{ult}, of 180 mph.

(6) Wood structural panel (WSP) sheathing shall be minimum 7/16 Performance Category OSB or Group 1 plywood meeting DOC PS1 or DOC PS2 requirements.

Table 6a. Vertical Siding or Lap Siding Installed Vertically – **Max. Allowable Wind Speed, V_{asd}**[1]

Perf. Category	Siding Type	Siding Width (inches)	Fastener Edge Spacing (inches o.c.)	Max. Allowable Wind Pressure (psf)	Max. Allowable Wind Speed, V_{asd}[6] (mph) Wind Exposure Category		
					B	C	D
3/8	Vertical Siding	16[2]	6[4]	80	170	150	140
	Lap Siding Installed Vertically	5[3]	12[5]	80	170	150	140
		6[3]		72	170	145	130
		7[3]		62	150	130	120
		8[3]		54	145	125	110
		9.5[3]		46	130	110	105
		12[3]		36	120	100	90
7/16	Lap Siding Installed Vertically	6[3]	12[5]	72	170	145	130
		7[3]		62	150	130	120
		8[3]		54	145	125	110
		9.5[3]		46	130	110	105
		12[3]		36	120	100	90

For **SI**: 1 inch = 25.4 mm, 1 psf = 47.88 Pa, 1 mph = 0.447 m/s.

(1) Siding shall be installed over 7/16 Performance Category or thicker wood structural panel sheathing meeting DOC PS1 or DOC PS2 requirements.

(2) Vertical Siding installed in accordance with Figures 2, 5, and 6.

(3) Lap Siding installed vertically in accordance with Figure 1 through 4.

(4) Fasteners must be ring shank nails with a minimum shank diameter of 0.092 inch. Length shall be long enough to fully penetrate wood structural panel wall sheathing. Fasteners must be spaced a maximum of 6 inches o.c. along the siding perimeter in accordance with Figures 5 and 6.

(5) Fasteners must be ring shank nails with a minimum shank diameter of 0.092 inch. Length shall be long enough to fully penetrate wood structural panel wall sheathing. Fasteners must be spaced a maximum of 12 inches o.c. along alternating edges of the length of the trim/batten in accordance with Figures 1 and 4.

(6) Three-second-gust; based on wind pressures acting toward and away from building surfaces, at 30-ft height in Zone 5 with smallest effective area in accordance with Chapter 6 of ASCE 7-05, Section R301.2.1 of the 2009 and 2012 IRC, and Section 1609.1.1 of the 2009 IBC.

Table 6b. Vertical Siding or Lap Siding Installed Vertically - **Max. Ultimate Wind Speed, V_{ult}**[1]

Perf. Category	Siding Type	Siding Width (inches)	Fastener Edge Spacing (inches o.c.)	Max. Ultimate Wind Pressure (psf)	Max. Ultimate Wind Speed, V_{ult}[6] (mph)		
					Wind Exposure Category		
					B	C	D
3/8	Vertical Siding	16[2]	6[4]	133	200	180	180
	Lap Siding Installed Vertically	5[3]	12[5]	133	200	180	180
		6[3]		120	200	180	160
		7[3]		103	200	160	160
		8[3]		90	180	160	150
		9.5[3]		76	160	150	130
		12[3]		60	150	130	120
7/16	Lap Siding Installed Vertically	6[3]	12[5]	120	200	180	160
		7[3]		103	200	160	160
		8[3]		90	180	160	150
		9.5[3]		76	160	150	130
		12[3]		60	150	130	120

For **SI**: 1 inch = 25.4 mm, 1 psf = 47.88 Pa, 1 mph = 0.447 m/s.

(1) Siding shall be installed over 7/16 Performance Category or thicker wood structural panel sheathing meeting DOC PS1 or DOC PS2 requirements.

(2) Vertical Siding installed in accordance with Figures 2, 5, and 6.

(3) Lap Siding installed vertically in accordance with Figure 1 through 4.

(4) Fasteners must be ring shank nails with a minimum shank diameter of 0.092 inch. Length shall be long enough to fully penetrate wood structural panel wall sheathing. Fasteners must be spaced a maximum of 6 inches o.c. along the siding perimeter in accordance with Figures 2, 5, and 6.

(5) Fasteners must be ring shank nails with a minimum shank diameter of 0.092 inch. Length shall be long enough to fully penetrate wood structural panel wall sheathing. Fasteners must be spaced a maximum of 12 inches o.c. along alternating edges of the length of the batten in accordance with Figures 1 and 4.

(6) Three-second-gust; based on wind pressures acting toward and away from building surfaces, at 30-ft height in Zone 5 with smallest effective area in accordance with Chapter 26 of ASCE 7-16 and ASCE 7-10, Section R301.2.1 of the 2018 and 2015 IRC, and Section 1609.1.1 of the 2018, 2015, and 2012 IBC.

APA – The Engineered Wood Association is an approved national standards developer accredited by American National Standards Institute (ANSI). APA publishes ANSI standards and Voluntary Product Standards for wood structural panels and engineered wood products. APA is an accredited certification body under ISO/IEC 17065 by Standards Council of Canada (SCC), an accredited inspection agency under ISO/IEC 17020 by International Code Council (ICC) International Accreditation Service (IAS), and an accredited testing organization under ISO/IEC 17025 by IAS. APA is also an approved Product Certification Agency, Testing Laboratory, Quality Assurance Entity, and Validation Entity by the State of Florida, and an approved testing laboratory by City of Los Angeles.

APA – THE ENGINEERED WOOD ASSOCIATION
HEADQUARTERS
7011 So. 19th St. ▪ Tacoma, Washington 98466
Phone: (253) 565-6600 ▪ Fax: (253) 565-7265 ▪ Internet Address: www.apawood.org

PRODUCT SUPPORT HELP DESK
(253) 620-7400 ▪ *E-mail Address*: help@apawood.org

DISCLAIMER

APA Product Report® is a trademark of *APA – The Engineered Wood Association,* Tacoma, Washington. The information contained herein is based on the product evaluation in accordance with the references noted in this report. Neither APA, nor its members make any warranty, expressed or implied, or assume any legal liability or responsibility for the use, application of, and/or reference to opinions, findings, conclusions, or recommendations included in this report. Consult your local jurisdiction or design professional to assure compliance with code, construction, and performance requirements. Because APA has no control over quality of workmanship or the conditions under which engineered wood products are used, it cannot accept responsibility for product performance or designs as actually constructed.

Joint Evaluation Report

ESR-1301

Reissued February 2020
Revised April 2020
This report is subject to renewal February 2022.

www.icc-es.org | (800) 423-6587 | (562) 699-0543 *A Subsidiary of the International Code Council®*

DIVISION: 06 00 00—WOOD, PLASTICS AND COMPOSITES
Section: 06 16 00—Sheathing

DIVISION: 07 00 00—THERMAL AND MOISTURE PROTECTION
Section: 07 46 23—Wood Siding

REPORT HOLDER:

LOUISIANA-PACIFIC CORPORATION

EVALUATION SUBJECT:

LP® SMARTSIDE® STRAND SUBSTRATE LAP SIDING AND LP® SMARTSIDE® STRAND SUBSTRATE PANEL SIDING

1.0 EVALUATION SCOPE

Compliance with the following codes:

- 2018, 2015, 2012, 2009, 2006, and 2003 *International Building Code®* (IBC)
- 2018, 2015, 2012, 2009, 2006, and 2003 *International Residential Code®* (IRC)

For evaluation for compliance with codes adopted by the Los Angeles Department of Building and Safety (LADBS), see ESR-1301 LABC and LARC Supplement.

Properties evaluated:

- Exterior siding
- Structural

2.0 USES

LP® SmartSide® Strand Substrate Lap Siding and LP® SmartSide® Strand Substrate Panel Siding are used as exterior wall covering materials on buildings where combustible materials are permitted.

LP® SmartSide® Strand Substrate Panel Siding may be used as Bracing Method 3 for conventional wood-framed walls as specified in the 2003/2006/2009/2012 IBC Section 2308.9.3 and 2003/2006 IRC Section R602.10, or the WSP Method as specified in 2018 and 2015 IBC Section 2308.6 and 2009/2012/2015/2018 IRC Section R602.10.

LP® SmartSide® Strand Substrate Panel Siding may be used as sheathing for wood structural panel shear walls having allowable shear loads specified for PS 2-compliant wood-based sheathing in accordance with 2003/2006 IBC Section 2306.4.1, and 2009/2012/2015/2018 IBC Section 2306.3.

3.0 DESCRIPTION

3.1 General:

LP® SmartSide® Strand Substrate Lap Siding and LP® SmartSide® Strand Substrate Panel Siding are engineered-wood exterior wall covering materials that are suitable for long-term exposure to weather or conditions of similar severity, when fastened to vertical supports or approved nailable wood substrates in accordance with their span ratings and this evaluation report. The lap siding and panel siding products consist of a mat-formed wood substrate preservatively treated with zinc borate in accordance with AWPA Standard T1, and a resin-impregnated overlay material bonded to the face of the lap and panel siding products intended to be exposed to the weather. Additionally, all panel and lap siding edges are factory-sealed with a sealer in accordance with the approved quality-control manual.

3.2 LP® SmartSide® Strand Substrate Lap Siding:

LP® SmartSide® Strand Substrate Lap Siding is available in widths of 5, 6, 7, 8, $9^1/_2$ and 12 inches (127, 152, 178, 203, 241 and 305 mm); categories $^3/_8$ and $^7/_{16}$; and lengths up to 16 feet (4877 mm). The 8-inch-wide (203 mm), $^7/_{16}$ category lap siding is also available with an optional self-alignment edge.

3.3 LP® SmartSide® Strand Substrate Panel Siding:

LP® SmartSide® Strand Substrate Panel Siding is 4 feet (1219 mm) wide and available in lengths up to 18 feet (5486 mm). LP® SmartSide® Strand Substrate Panel Siding is available in $^3/_8$, $^7/_{16}$, and $^{19}/_{32}$ categories. The $^3/_8$ category panel has grooves spaced at 8 inches (203 mm), with a minimum thickness at the grooves of 0.164 inch (4 mm) and a minimum thickness at the shiplap of 0.136 inch (4 mm), or no groove. The $^7/_{16}$ category panel has grooves spaced at 4 or 8 inches (102 or 203 mm), with a minimum thickness at the grooves of 0.235 inch (6 mm) and a minimum thickness at the shiplap of 0.150 inch (4 mm) or no groove. The $^{19}/_{32}$ category panel has grooves spaced at 8 inches (203 mm), with a minimum thickness at the groove of 0.311 inch (8 mm) and a minimum shiplap thickness of 0.194 inch (5 mm).

LP® SmartSide® Vertical Siding is a narrow width panel siding and is available in 3/8 category, nominal width of 16 inches (406 mm), and 16 feet (4877 mm) in length. The vertical siding can only be installed vertically.

ICC-ES Evaluation Reports are not to be construed as representing aesthetics or any other attributes not specifically addressed, nor are they to be construed as an endorsement of the subject of the report or a recommendation for its use. There is no warranty by ICC Evaluation Service, LLC, and APA – The Engineered Wood Association, express or implied, as to any finding or other matter in this report, or as to any product covered by the report.

Copyright © 2020 ICC Evaluation Service, LLC and APA – The Engineered Wood Association. All rights reserved.

LP® SmartSide® Strand Substrate Panel Siding is classified as Exterior Rated Siding or Exterior Rated Siding—Sheathing. The classification is noted in the label on the panel. Exterior Rated Siding is intended to be installed in applications in accordance with the 2006/2009/2012 IBC Section 2308.9.3 and IRC Section R602.10 or 2018 and 2015 IBC Section 2308.6 and 2018 and 2015 IRC Section R602.10 as an exterior siding suitable for long-term exposure to weather or conditions of similar severity. In addition to the intended application for Exterior Rated Siding, Exterior Rated Siding—Sheathing is intended to be installed in applications in accordance with 2003/2006 IBC Section 2306.4.1, and 2009/2012/2015/2018 IBC Section 2306.3.

4.0 INSTALLATION

4.1 General:

LP® SmartSide® Strand Substrate Lap Siding and LP® SmartSide® Strand Substrate Panel Siding must be installed in accordance with the manufacturer's published installation instructions (titled *Application Instructions LP® SmartSide® Strand Substrate Lap LP® SmartSide® Strand Substrate Panel Siding*) and this report. In the event of conflicts, this report governs. A copy of the manufacturer's installation instructions must be on the jobsite at all times during installation.

LP® SmartSide® Strand Substrate Lap Siding and LP® SmartSide® Strand Substrate Panel Siding must be installed with an approved water-resistive barrier as required by the applicable code. Openings in, penetrations through, and terminations of the LP® SmartSide® Strand Substrate Lap Siding and LP® SmartSide® Strand Substrate Panel Siding are outside the scope of this report and must be specifically approved by the code official in accordance with the applicable code.

Unless otherwise noted in this report, fasteners and fastener spacing must be as noted in the applicable code.

4.2 LP® SmartSide® Strand Substrate Lap Siding:

LP® SmartSide® Strand Substrate Lap Siding must be attached to framing members spaced a maximum of 16 inches (406 mm) on center for $^3/_8$ category siding and a maximum of 24 inches (610 mm) on center for $^7/_{16}$ category siding.

Self-aligning LP® SmartSide® Strand Substrate Lap Siding is installed with nails placed at the top of the LP® SmartSide® Strand Substrate Lap Siding, $^3/_4$ inch (19 mm) down from the upper edge. Each successive course of lap siding must rest on the back rabbet and must self-align at an overlap of 1 inch (25 mm).

Nails must be of sufficient length to penetrate a minimum of $1^1/_2$ inches (38 mm) and 2 inches (51 mm), respectively, for 0.113-inch and 0.092-inch nails, through the sheathing and into framing at each stud location.

LP® SmartSide® lap siding, when installed vertically, shall be installed over a minimum $^7/_{16}$ category wood structural panel sheathing meeting DOC PS 1 or DOC PS 2 requirements, and shall be covered by a batten at the siding joint or shall be overlapped with another vertical lap siding in accordance with the recommendations provided by the manufacturer, as shown in Figures 1 through 4. Lap siding installed vertically can only span one floor plate-to-plate. Each vertical application shall not span beyond one floor to ceiling distance, or one floor to top of gable distance.

4.3 LP® SmartSide® Strand Substrate Panel Siding:

LP® SmartSide® Strand Substrate Panel Siding must be installed with its long dimension oriented vertically.

When LP® SmartSide® Strand Substrate Panel Siding is applied directly to the framing, the maximum spacing of the framing must be consistent with the span rating of the LP® SmartSide® Strand Substrate Panel Siding, which is identified on the panel's label.

Allowable loads for shearwalls sheathed with LP® SmartSide® Strand Substrate Panel Siding—Sheathing are noted in Table 1.

Four-foot-by-8-foot (1219 mm by 2438 mm) LP® SmartSide® Strand Substrate Panel Siding—Sheathing installed vertically, directly to framing, with a single row of nails penetrating both laps, spaced 6 inches on center at panel edges and 12 inches (305 mm) on center at intermediate supports may be used to satisfy the wall bracing requirements for conventional light frame construction specified in the code for prescriptive construction. Install per code requirements for bracing method 3 with wood structural panels or WSP bracing method.

All LP® SmartSide® Strand Substrate Panel Siding joints must occur at framing members and must be protected with a continuous wood batt, approved caulking, flashing, or vertical or horizontal shiplap, or otherwise made waterproof.

LP® SmartSide® Vertical Siding shall be installed over a minimum $^7/_{16}$ category wood structural sheathing meeting DOC PS 1 or DOC PS 2 requirements, and shall be covered by a batten at the panel joint in accordance with the recommendations provided by the manufacturer, as shown in Figures 2, 5, and 6. Vertical Siding can only span one floor plate-to-plate. Each vertical application shall not span beyond one floor to ceiling distance, or one floor to top of gable distance.

4.4 Component and Cladding Wind Pressure Capacity:

Maximum allowable component and cladding wind loads (wall, zone 5) for LP® SmartSide® Strand Substrate Lap Siding and LP® SmartSide® Strand Substrate Panel Siding based on a minimum fastener schedule, are provided in Tables 2 through 5. Tables 2 and 3, for lap and panel siding, respectively, are based on full fastener penetration into the wall studs, i.e., fastener penetration = fastener length - siding thickness. Design wind loads for LP® SmartSide® Strand Substrate Lap Siding when installed over the facer of structural insulated panels (SIPs) are listed in Table 4. Design wind loads for LP® SmartSide® Strand Substrate Vertical Siding and Lap Siding applied vertically are listed in Table 5.

5.0 CONDITIONS OF USE

The LP® SmartSide® Strand Substrate Lap Siding and LP® SmartSide® Strand Substrate Panel Siding described in this report comply with, or are suitable alternatives to what is specified in, those codes listed in Section 1.0 of this report, subject to the following conditions:

5.1 LP® SmartSide® Strand Substrate Lap Siding must not be used to satisfy the bracing requirements specified in the code.

5.2 LP® SmartSide® Strand Substrate Panel Siding—Sheathing, when installed as set forth in this report, may be used as Bracing Method 3 specified in Section 2308.9 of the 2012, 2009, 2006 and 2003 IBC and Section R602.10 of the IRC, or the WSP Method as specified in 2018 and 2015 IBC Section 2308.6 and IRC Section R602.10.

5.3 In areas where seismic analysis is required by the applicable code, the applicable code requirements for

wood structural panel shear walls must be consulted for additional detailing requirements, restrictions concerning certain usages, required modifications to the allowable shear loads tabulated in this report, and additional inspection requirements.

5.4 LP® SmartSide® Strand Substrate Lap Siding and LP® SmartSide® Strand Substrate Panel Siding must not be installed in contact with concrete or masonry.

5.5 LP® SmartSide® Strand Substrate Lap Siding and LP® SmartSide® Strand Substrate Panel Siding must be installed with a minimum 6 inches (152 mm) of clearance from finished grade.

5.6 When field cuts are made to LP® SmartSide® Strand Substrate Lap Siding and LP® SmartSide® Strand Substrate Panel Siding, all exposed surfaces must be finished according to the paint or caulk/sealant manufacturers' specifications.

5.7 LP® SmartSide® Strand Substrate Lap Siding and LP® SmartSide® Strand Substrate Panel Siding are manufactured by Louisiana-Pacific Corporation in Dawson Creek, British Columbia (Mill No. 402); Hayward, Wisconsin (Mill No. 357); Newberry, Michigan (Mill No. 416); Tomahawk, Wisconsin (Mill No. 435); Two Harbors, Minnesota (Mill No. 399); and Swan Valley, Minitonas, Manitoba, Canada (Mill No. 457); under a quality control program with inspections by APA – The Engineered Wood Association and ICC-ES.

6.0 EVIDENCE SUBMITTED

Data in accordance with the ICC-ES Acceptance Criteria for Treated-engineered-wood Siding (AC321), dated May 2019.

7.0 IDENTIFICATION

7.1 LP® SmartSide® Strand Substrate Lap Siding and LP® SmartSide® Strand Substrate Panel Siding must be labeled with the product designation and the name of Louisiana-Pacific Corp. The stamp shall provide the following information:

1. Mill number.
2. The evaluation report number (ESR-1301).
3. Grade/exposure.
4. Span rating.
5. Performance category (based on customary inch fractions).

7.2 The report holder's contact information is the following:

LOUISIANA-PACIFIC CORPORATION
414 UNION STREET, SUITE 2000
NASHVILLE, TENNESSEE 37219
(888) 820-0325
www.LPcorp.com
marketing.center@lpcorp.com

TABLE 1—ALLOWABLE RACKING SHEAR (plf) FOR LP® SMARTSIDE® STRAND SUBSTRATE PANEL SIDING—SHEATHING SHEAR WALLS WITH FRAMING OF DOUGLAS FIR–LARCH OR SOUTHERN PINE FOR WIND OR SEISMIC LOADING[1,2,3,7,8]

PERFORMANCE CATEGORY	MINIMUM NAIL PENETRATION IN FRAMING (inches)	PANELS APPLIED DIRECTLY TO FRAMING					PANELS APPLIED OVER 5/8-INCH GYPSUM SHEATHING				
		Nail Size (Common or Galvanized Box)[7,8]	Nail Spacing at Panel Edges (inches)				Nail Size (Common or Galvanized Box)[7,8]	Nail Spacing at Panel Edges (inches)			
			6	4	3	2[4]		6	4	3	2[4]
5/16[5,6]	1-1/4	6d	180	270	350	450	8d	180	270	350	450
3/8[5,6]			200	300	390	510		200	300	390	510
3/8[5,6]	1-1/2	8d	220	320	410	530	10d	260	380	490[4]	640
7/16[5]			240	350	450	585		260	380	490[4]	640
19/32[5]	1-5/8	10d	340	510	665[4]	870	--	--	--	--	--

For **SI:** 1 inch = 25.4 mm, 1 plf = 14.6 N/m.

[1]For framing of other species: (a) Find specific gravity for species of lumber in AF & PA National Design Specification; (b) find shear value from table for nails size; c) multiply value by 0.82 for species with specific gravity greater than or equal to 0.42 but less than 0.49, or 0.65 for species with specific gravity less than 0.42.

[2]All panel edges must be backed with 2-inch nominal or wider framing. Panels must be installed with the long dimension oriented in the vertical direction. Space nails 6 inches o.c. along intermediate framing members for $^3/_8$ category and $^7/_{16}$ category panels installed on studs spaced 24 inches o.c. For other conditions and panel thicknesses, space nails 12 inches o.c. on intermediate supports.

[3]The values are for short-term loads due to earthquake and must be reduced by 25 percent for normal duration of loading. For wind load applications, the values in the table shall be permitted to be multiplied by 1.4.

[4]Framing at panel edges must be 3 inches nominal or wider and nails must be staggered where nails are spaced 2 inches o.c., and where 10d nails having penetration into framing of more than $1^5/_8$ inches are spaced 3 inches, or less, o.c. **Exception:** Unless otherwise required, 2-inch nominal framing may be used where full nailing surface is available and nails are staggered.

[5]Except as noted in Footnote 7, panel thickness at point of nailing at panel edges determines applicable shear values, except that $^3/_8$ category panels nailed at shiplap edges use shear values for $^5/_{16}$ category panels, and $^7/_{16}$ and $^{19}/_{32}$ category panel sidings nailed at shiplap edges use shear values for $^3/_8$ category panels.

[6]Shiplap edges must be double-nailed; one nail must be placed in the underlap and the second nail must be placed 1 inch from the panel edge, not in the overlap, at the nail spacing specified for the applicable shear value.

[7]Fasteners must not be installed in panel siding grooves in the field of the panel siding or when the panel siding grooves occur at cut edges of the panel siding.

[8]Fasteners shall be carbon steel, hot-dipped galvanized plain (smooth) shank box or common nails and meet dimensions as specified in ASTM F1667.

TABLE 2A—LAP SIDING INSTALLED HORIZONTALLY WITH 0.113-INCH-DIAMETER NAILS MAXIMUM NOMINAL (ALLOWABLE) COMPONENT AND CLADDING DESIGN WIND SPEED, V_{asd}[1,2]

PERFORMANCE CATEGORY	MAXIMUM WALL STUD SPACING[3] (inches)	SIDING WIDTH (inches)	MAXIMUM ALLOWABLE WIND PRESSURE (psf)	MAXIMUM NOMINAL (ALLOWABLE) WIND SPEED, V_{asd}[4] (mph)		
				Wind Exposure Category		
				B	C	D
3/8	16	5, 6, 7	80	170	150	140
		8	74	170	145	130
		9-1/2	61	150	130	120
		12	47	130	110	105
7/16	16	6, 7	80	170	150	140
		8	74	170	145	130
		9-1/2	65	150	130	125
		12	47	130	110	105
	24	6	69	150	140	130
		7	58	150	130	110
		8	49	140	120	110
		9-1/2	41	125	105	100
		12	31	110	90	85

For **SI:** 1 inch = 25.4 mm, 1 psf = 47.88 Pa, 1 mph = 1.6 kph.

[1]One fastener per stud located $^3/_4$ inch from the top edge of the siding. Each successive course of lap siding must overlap a minimum of 1 inch. Fasteners shall be hot dipped galvanized plain (smooth) shank, carbon steel nails, with a minimum shank diameter of 0.113 inch, and long enough to penetrate structural framing or wood structural panels and structural framing a minimum of 2 inches. Lap siding is not a bracing material.
[2]Tabulated values assume full penetration of the fastener into the wall studs, i.e., fastener penetration = fastener length – siding thickness.
[3]Wall studs must have a minimum specific gravity of 0.42.
[4]Three-second-gust; based on wind pressures acting toward and away from building surfaces, at 30-feet height in Zone 5 with smallest effective area per Chapter 6 of ASCE 7-05, Section R301.2 of the 2009/2012 IRC, and Section 1609.1.1 of the 2009 IBC.

TABLE 2B—LAP SIDING INSTALLED HORIZONTALLY WITH 0.113-INCH-DIAMETER NAILS MAXIMUM ULTIMATE COMPONENT AND CLADDING DESIGN WIND SPEED, V_{ult}[1,2]

PERFORMANCE CATEGORY	MAXIMUM WALL STUD SPACING[3] (inches)	SIDING WIDTH (inches)	MAXIMUM ULTIMATE WIND PRESSURE (psf)	MAXIMUM ULTIMATE DESIGN WIND SPEED, V_{ult}[4] (mph)		
				Wind Exposure Category		
				B	C	D
3/8	16	5, 6, 7	133	200[5]	180	180
		8	123	200[5]	180	160
		9-1/2	102	200[5]	160	150
		12	79	180	150	140
7/16	16	6, 7	133	200[5]	180	180
		8	123	200[5]	180	160
		9-1/2	102	200[5]	160	150
		12	79	180	150	140
	24	6	115	200[5]	180	160
		7	96	180	160	150
		8	85	180	150	140
		9-1/2	68	160	140	130
		12	52	140	120	110

For **SI:** 1 inch = 25.4 mm, 1 psf = 47.88 Pa, 1 mph = 1.6 kph.

[1]One fastener per stud located $^3/_4$ inch from the top edge of the siding. Each successive course of lap siding must overlap a minimum of 1 inch. Fasteners shall be hot dipped galvanized plain (smooth) shank, carbon steel nails, with a minimum shank diameter of 0.113 inch, and long enough to penetrate structural framing or wood structural panels and structural framing a minimum of 2 inches. Lap siding is not a bracing material.
[2]Tabulated values assume full penetration of the fastener into the wall studs, i.e., fastener penetration = fastener length – siding thickness.
[3]Wall studs must have a minimum specific gravity of 0.42.
[4]Three-second-gust; based on wind pressures acting toward and away from building surfaces, at 30-feet height in Zone 5 with smallest effective area per Chapter 26 of ASCE 7-10 and ASCE 7-16, Section R301.2.1 of the 2015/2018 IRC, and Section 1609.1.1 of the 2012/2015/2018 IBC.
[5]Table R301.2(2) of the 2015/2018 IRC is limited to a maximum ultimate design wind speed, V_{ult}, of 180 mph.

TABLE 2C—LAP SIDING INSTALLED HORIZONTALLY WITH 0.092-INCH-DIAMETER NAILS MAXIMUM NOMINAL (ALLOWABLE) COMPONENT AND CLADDING DESIGN WIND SPEED, V_{asd}[1,2]

PERFORMANCE CATEGORY	MAXIMUM WALL STUD SPACING[3] (inches)	SIDING WIDTH (inches)	MAXIMUM ALLOWABLE WIND PRESSURE (psf)	MAXIMUM NOMINAL (ALLOWABLE) WIND SPEED, V_{asd}[4] (mph)		
				Wind Exposure Category		
				B	C	D
3/8	16	5	78	170	150	130
		6	63	150	130	125
		7	52	145	120	110
		8	45	130	110	105
		9-1/2	37	120	100	90
		12	28	105	90	--
7/16	16	6	63	150	130	125
		7	52	145	120	110
		8	45	130	110	105
		9-1/2	37	120	100	90
		12	28	105	90	--
	24	6	42	130	110	100
		7	35	120	100	90
		8	30	110	90	85
		9-1/2	25	100	85	--
		12	19	85	--	--

For **SI:** 1 inch = 25.4 mm, 1 psf = 47.88 Pa, 1 mph = 1.6 kph.

[1]One fastener per stud located $^3/_4$ inch from the top edge of the siding. Each successive course of lap siding must overlap a minimum of 1 inch. Fasteners shall be hot dipped galvanized plain (smooth) shank, carbon steel nails, with a minimum shank diameter of 0.092 inch, and long enough to penetrate structural framing or wood structural panels and structural framing a minimum of $1^1/_2$ inches. Lap siding is not a bracing material.

[2]Tabulated values assume full penetration of the fastener into the wall studs, i.e., fastener penetration = fastener length – siding thickness.

[3]Wall studs must have a minimum specific gravity of 0.42.

[4]Three-second-gust; based on wind pressures acting toward and away from building surfaces, at 30-feet height in Zone 5 with smallest effective area per Chapter 6 of ASCE 7-05, Section R301.2 of the 2009/2012 IRC, and Section 1609.1.1 of the 2009 IBC.

TABLE 2D—LAP SIDING INSTALLED HORIZONTALLY WITH 0.092-INCH-DIAMETER NAILS MAXIMUM ULTIMATE COMPONENT AND CLADDING DESIGN WIND SPEED, V_{ult}[1,2]

PERFORMANCE CATEGORY	MAXIMUM WALL STUD SPACING[3] (inches)	SIDING WIDTH (inches)	MAXIMUM ULTIMATE WIND PRESSURE (psf)	MAXIMUM ULTIMATE DESIGN WIND SPEED, V_{ult}[4] (mph)		
				Wind Exposure Category		
				B	C	D
3/8	16	5	131	200[5]	180	180
		6	104	200[5]	160	160
		7	87	180	160	140
		8	75	160	140	130
		9-1/2	61	150	130	120
		12	47	140	115	--
7/16	16	6	104	200[5]	160	160
		7	87	180	160	140
		8	75	160	140	130
		9-1/2	61	150	130	120
		12	47	140	115	--
	24	6	70	160	140	130
		7	58	150	130	120
		8	50	140	120	110
		9-1/2	41	130	110	--
		12	32	110	--	--

For **SI:** 1 inch = 25.4 mm, 1 psf = 47.88 Pa, 1 mph = 1.6 kph.

[1]One fastener per stud located $^3/_4$ inch from the top edge of the siding. Each successive course of lap siding must overlap a minimum of 1 inch. Fasteners shall be hot dipped galvanized plain (smooth) shank, carbon steel nails, with a minimum shank diameter of 0.092 inch, and long enough to penetrate structural framing or wood structural panels and structural framing a minimum of 2 inches. Lap siding is not a bracing material**.**

[2]Tabulated values assume full penetration of the fastener into the wall studs, i.e., fastener penetration = fastener length – siding thickness.

[3]Wall studs must have a minimum specific gravity of 0.42.

[4]Three-second-gust; based on wind pressures acting toward and away from building surfaces, at 30-feet height in Zone 5 with smallest effective area per Chapter 26 of ASCE 7-10 and ASCE 7-16, Section R301.2.1 of the 2015/2018 IRC, and Section 1609.1.1 of the 2012/2015/2018 IBC.

[5]Table R301.2(2) of the 2015/2018 IRC is limited to a maximum ultimate design wind speed, V_{ult}, of 180 mph.

TABLE 3A—PANEL SIDING INSTALLED VERTICALLY WITH 0.113-INCH NAILS MAXIMUM NOMINAL (ALLOWABLE) COMPONENT AND CLADDING DESIGN WIND SPEED, V_{asd}[1]

PERFORMANCE CATEGORY	MAXIMUM WALL STUD SPACING[2] (inches)	FASTENER SPACING[3] (inches o.c.)		MAXIMUM ALLOWABLE WIND PRESSURE (psf)	MAXIMUM NOMINAL (ALLOWABLE) WIND SPEED, V_{asd}[4] (mph)		
		Edges	Field		Wind Exposure Category		
					B	C	D
3/8	16	6	12	43	130	110	100
			6	80	170	150	140
	24	6	12	29	105	90	--
			6	58	150	130	110
7/16	16	6	12	43	130	110	100
			6	80	170	150	140
	24	6	12	29	105	90	--
			6	58	150	130	110
19/32	16	6	12	43	130	110	100
			6	80	170	150	140
	24	6	12	29	105	90	-
			6	58	150	130	110

For **SI:** 1 inch = 25.4 mm, 1 psf = 47.88 Pa, 1 mph = 1.6 kph.

[1]Tabulated values assume full penetration of the fastener into the wall studs, i.e., fastener penetration = fastener length – siding thickness.

[2]Wall studs must have a minimum specific gravity of 0.42.

[3]Fasteners shall be hot dipped galvanized plain (smooth) shank, carbon steel nails, with a minimum shank diameter of 0.113 inch, and long enough to penetrate structural framing or wood structural panels and structural framing a minimum of 2 inches.

[4]Three-second-gust; based on wind pressures acting toward and away from building surfaces, at 30-feet in Zone 5 with smallest effective area per Chapter 6 of ASCE 7-05, Section R301.2 of the 2009/2012 IRC, and Section 1609.1.1 of the 2009 IBC.

TABLE 3B—PANEL SIDING INSTALLED VERTICALLY WITH 0.113-INCH NAILS MAXIMUM ULTIMATE COMPONENT AND CLADDING DESIGN WIND SPEED, V_{ult}[1]

PERFORMANCE CATEGORY	MAXIMUM WALL STUD SPACING[2] (inches)	FASTENER SPACING[3] (inches o.c.)		MAXIMUM ULTIMATE WIND PRESSURE (psf)	MAXIMUM ULTIMATE DESIGN WIND SPEED, V_{ult}[4] (mph)		
		Edges	Field		Wind Exposure Category		
					B	C	D
3/8	16	6	12	72	160	140	130
			6	133	200[5]	180	180
	24	6	12	48	140	115	--
			6	96	180	160	150
7/16	16	6	12	72	160	140	130
			6	133	200[5]	180	180
	24	6	12	48	140	115	--
			6	96	180	160	150
19/32	16	6	12	72	160	140	130
			6	133	200[5]	180	180
	24	6	12	48	140	115	--
			6	96	180	160	150

For **SI:** 1 inch = 25.4 mm, 1 psf = 47.88 Pa, 1 mph = 1.6 kph.

[1]Fasteners shall be a hot dipped galvanized plain (smooth) shank nail, with a minimum shank diameter of 0.113 inch, and long enough to penetrate structural framing or wood structural panels and structural framing a minimum of 2 inches. Tabulated values assume full penetration of the fastener into the wall studs, i.e., fastener penetration = fastener length – siding thickness.
[2]Wall studs must have a minimum specific gravity of 0.42.
[3]Fasteners shall be hot dipped galvanized plain (smooth) shank, carbon steel nails, with a minimum shank diameter of 0.113 inch, and long enough to penetrate structural framing or wood structural panels and structural framing a minimum of 2 inches.
[4]Three-second-gust; based on wind pressures acting toward and away from building surfaces, at 30-feet height in Zone 5 with smallest effective area per Chapter 26 of ASCE 7-10 and ASCE 7-16, and Section 1609.1.1 of the 2012/2015/2018 IBC.
[5]Table R301.2(2) of the 2015/2018 IRC is limited to a maximum ultimate design wind speed, V_{ult}, of 180 mph.

TABLE 3C—PANEL SIDING INSTALLED VERTICALLY WITH 0.092-INCH NAILS MAXIMUM NOMINAL (ALLOWABLE) COMPONENT AND CLADDING DESIGN WIND SPEED, V_{asd}[1]

PERFORMANCE CATEGORY	MAXIMUM WALL STUD SPACING[2] (inches)	FASTENER SPACING[3] (inches o.c.)		MAXIMUM ALLOWABLE WIND PRESSURE (psf)	MAXIMUM NOMINAL (ALLOWABLE) WIND SPEED, V_{asd}[4] (mph)		
		Edges	Field		Wind Exposure Category		
					B	C	D
3/8	16	6	12	26	100	85	--
			6	52	145	120	110
	24	6	12	17	85	--	--
			6	35	120	100	90
7/16	16	6	12	26	100	85	--
			6	52	145	120	110
	24	6	12	17	85	--	--
			6	35	120	100	90
19/32	16	6	12	26	100	85	--
			6	52	145	120	110
	24	6	12	17	85	--	--
			6	35	120	100	90

For **SI:** 1 inch = 25.4 mm, 1 psf = 47.88 Pa, 1 mph = 1.6 kph.

[1]Tabulated values assume full penetration of the fastener into the wall studs, i.e., fastener penetration = fastener length – siding thickness.
[2]Wall studs must have a minimum specific gravity of 0.42.
[3]Fasteners shall be hot dipped galvanized plain (smooth) shank, carbon steel nails, with a minimum shank diameter of 0.092 inch, and long enough to penetrate structural framing or wood structural panels and structural framing a minimum of $1^1/_2$ inches. Configuration cannot be used for lateral bracing due to nail size**.**
[4]Three-second-gust; based on wind pressures acting toward and away from building surfaces, at 30-feet in Zone 5 with smallest effective area per Chapter 6 of ASCE 7-05, Section R301.2 of the 2009/2012 IRC, and Section 1609.1.1 of the 2009 IBC.

TABLE 3D—PANEL SIDING INSTALLED VERTICALLY WITH 0.092-INCH NAILS MAXIMUM ULTIMATE COMPONENT AND CLADDING DESIGN WIND SPEED, V_{ult}[1]

PERFORMANCE CATEGORY	MAXIMUM WALL STUD SPACING[2] (inches)	FASTENER SPACING[3] (inches o.c.)		MAXIMUM ULTIMATE WIND PRESSURE (psf)	MAXIMUM ULTIMATE DESIGN WIND SPEED, V_{ult}[4] (mph)		
		Edges	Field		Wind Exposure Category		
					B	C	D
3/8	16	6	12	44	130	110	--
			6	87	180	160	140
	24	6	12	29	--	--	--
			6	58	150	130	120
7/16	16	6	12	44	130	110	--
			6	87	180	160	140
	24	6	12	29	--	--	--
			6	58	150	130	120
19/32	16	6	12	44	130	110	--
			6	87	180	160	140
	24	6	12	29	--	--	--
			6	58	150	130	120

For **SI:** 1 inch = 25.4 mm, 1 psf = 47.88 Pa, 1 mph = 1.6 kph.

[1]Tabulated values assume full penetration of the fastener into the wall studs, i.e., fastener penetration = fastener length – siding thickness.
[2]Wall studs must have a minimum specific gravity of 0.42.
[3]Fasteners shall be hot dipped galvanized plain (smooth) shank, carbon steel nails, with a minimum shank diameter of 0.092 inch, and long enough to penetrate structural framing or wood structural panels and structural framing a minimum of $1^1/_2$ inches. Configuration cannot be used for lateral bracing due to nail size.
[4]Three-second-gust; based on wind pressures acting toward and away from building surfaces, at 30-feet height in Zone 5 with smallest effective area per Chapter 26 of ASCE 7-10 and ASCE 7-16, and Section 1609.1.1 of the 2012/2015/2018 IBC.
[5]Table R301.2(2) of the 2015/2018 IRC is limited to a maximum ultimate design wind speed, V_{ult}, of 180 mph.

TABLE 4A—LAP SIDING INSTALLED HORIZONTALLY TO SIPS MAXIMUM NOMINAL (ALLOWABLE) COMPONENT AND CLADDING DESIGN WIND SPEED, V_{asd}[1,2]

PERFORMANCE CATEGORY	MAXIMUM RING SHANK NAIL SPACING[3] (inches)	MAXIMUM WOOD SCREW SPACING[4] (inches)	SIDING WIDTH (inches)	MAXIMUM ALLOWABLE WIND PRESSURE (psf)	MAXIMUM NOMINAL (ALLOWABLE) WIND SPEED, V_{asd}[5] (mph)		
					Wind Exposure Category		
					B	C	D
3/8	8	12	5	80	170	150	140
			6	80	170	150	140
			7	72	170	145	130
			8	63	150	130	125
			9-1/2	54	145	125	110
			12	40	125	105	90
7/16	12	16	6	58	150	130	120
			7	50	140	120	110
			8	42	130	110	100
			9-1/2	36	120	100	90
			12	27	105	85	--

For **SI:** 1 inch = 25.4 mm, 1 psf = 47.88 Pa, 1 mph = 1.6 kph.

[1]The facer of the structural insulated panels (SIPs) shall be 7/16 Performance Category or thicker OSB sheathing meeting DOC PS 2 requirements.
[2]The tabulated values represent the capacity of the LP® Lap Siding installed in accordance with the requirements of this table. The tabulated wind speed shall not exceed the SIP capacity for wind load resistance.
[3]One ring shank fastener located 3/4 inch from the top edge of the siding. Each successive course of lap siding must overlap a minimum of 1 inch. Fasteners shall be a hot dipped galvanized ring shank, carbon steel nails, with a minimum shank diameter of 0.092 inch. Length shall be long enough to fully penetrate wood structural facer panel.
[4]One #8 wood screw located 3/4 inch from the top edge of the siding may be used. The wood screws must have a minimum shank diameter of 0.164 inch. Length shall be long enough to fully penetrate wood structural facer panel.
[5]Three-second-gust; based on wind pressures acting toward and away from building surfaces, at 30-ft height in Zone 5 with smallest effective area in accordance with Chapter 6 of ASCE 7-05, Section R301.2.1 of the 2009/2012 IRC, and Section 1609.1.1 of the 2009 IBC.

TABLE 4B—LAP SIDING INSTALLED HORIZONTALLY TO SIPS MAXIMUM ULTIMATE COMPONENT AND CLADDING DESIGN WIND SPEED, V_{ult}[1,2]

PERFORMANCE CATEGORY	MAXIMUM RING SHANK NAIL SPACING[3] (inches)	MAXIMUM WOOD SCREW SPACING[4] (inches)	SIDING WIDTH (inches)	MAXIMUM ULTIMATE WIND PRESSURE (psf)	MAXIMUM ULTIMATE DESIGN WIND SPEED, V_{ult}[5] (mph)		
					Wind Exposure Category		
					B	C	D
3/8	8	12	5	133	200[6]	180	180
			6	133	200[6]	180	180
			7	119	200[6]	160	160
			8	105	200[6]	160	160
			9-1/2	90	180	160	150
			12	67	160	140	120
7/16	12	16	6	97	200[6]	160	150
			7	79	180	150	140
			8	70	160	140	130
			9-1/2	60	150	130	120
			12	45	130	115	--

For **SI:** 1 inch = 25.4 mm, 1 psf = 47.88 Pa, 1 mph = 1.6 kph.

[1]The facer of the structural insulated panels (SIPs) shall be 7/16 Performance Category or thicker OSB sheathing meeting DOC PS 2 requirements.
[2]The tabulated values represent the capacity of the LP Lap Siding installed in accordance with the requirements of this table. The tabulated wind speed shall not exceed the SIP capacity for wind load resistance.
[3]One ring shank fastener located $^3/_4$ inch from the top edge of the siding. Each successive course of lap siding must overlap a minimum of 1 inch. Fasteners shall be a hot dipped galvanized ring shank, carbon steel nails, with a minimum shank diameter of 0.092 inch. Length shall be long enough to fully penetrate wood structural facer panel.
[4]One #8 wood screw located $^3/_4$ inch from the top edge of the siding may be used. The wood screws must have a minimum shank diameter of 0.164 inch. Length shall be long enough to fully penetrate wood structural facer panel.
[5]Three-second-gust; based on wind pressures acting toward and away from building surfaces, at 30-ft height in Zone 5 with smallest effective area in accordance with Chapter 26 of ASCE 7-10 and ASCE 7-16, Section R301.2.1 of the 2015/2018 IRC, and Section 1609.1.1 of the 2012/2015/2018 IBC.
[6]Table R301.2(2) of the 2015/2018 IRC is limited to a maximum ultimate design wind speed, V_{ult}, of 180 mph.

TABLE 5A—VERTICAL SIDING OR LAP SIDING INSTALLED VERTICALLY MAXIMUM NOMINAL (ALLOWABLE) COMPONENT AND CLADDING DESIGN WIND SPEED, V_{asd}[1]

PERFORMANCE CATEGORY	SIDING TYPE	SIDING WIDTH (inches)	FASTENER EDGE SPACING (inches o.c.)	MAXIMUM ALLOWABLE WIND PRESSURE (psf)	MAXIMUM NOMINAL (ALLOWABLE) WIND SPEED, V_{asd}[6] (mph)		
					Wind Exposure Category		
					B	C	D
3/8	Vertical Siding	16[2]	6[4]	80	170	150	140
	Lap Siding Installed Vertically	5[3]	12[5]	80	170	150	140
		6[3]		72	170	145	130
		7[3]		62	150	130	120
		8[3]		54	145	125	110
		9-1/2[3]		46	130	110	105
		12[3]		36	120	100	90
7/16	Lap Siding Installed Vertically	6[3]	12[5]	72	170	145	130
		7[3]		62	150	130	120
		8[3]		54	145	125	110
		9-1/2[3]		46	130	110	105
		12[3]		36	120	100	90

For **SI:** 1 inch = 25.4 mm, 1 psf = 47.88 Pa, 1 mph = 1.6 kph.

[1]Siding shall be installed over 7/16 Performance Category or thicker wood structural panel sheathing meeting DOC PS 1 or DOC PS 2 requirements.
[2]Vertical Siding installed in accordance with Figures 2, 5, and 6.
[3]Lap Siding installed vertically in accordance with Figure 1 through 4.
[4]Fasteners must be hot dipped galvanized ring shank, carbon steel nails with a minimum shank diameter of 0.092 inch. Length shall be long enough to fully penetrate wood structural panel wall sheathing. Fasteners must be spaced a maximum of 6 inches o.c. along the siding perimeter in accordance with Figures 5 and 6.
[5]Fasteners must be hot dipped galvanized ring shank, carbon steel nails with a minimum shank diameter of 0.092 inch. Length shall be long enough to fully penetrate wood structural panel wall sheathing. Fasteners must be spaced a maximum of 12 inches o.c. along alternating edges of the length of the trim/batten in accordance with Figures 1 and 4.
[6]Three-second-gust; based on wind pressures acting toward and away from building surfaces, at 30-ft height in Zone 5 with smallest effective area in accordance with Chapter 6 of ASCE 7-05, Section R301.2.1 of the 2009/2012 IRC, and Section 1609.1.1 of the 2009 IBC.

TABLE 5B—VERTICAL SIDING OR LAP SIDING INSTALLED VERTICALLY MAXIMUM ULTIMATE COMPONENT AND CLADDING DESIGN WIND SPEED, V_{ult}[1,2]

PERFORMANCE CATEGORY	SIDING TYPE	SIDING WIDTH (inches)	FASTENER EDGE SPACING (inches o.c.)	MAXIMUM ALLOWABLE WIND PRESSURE (psf)	MAXIMUM NOMINAL (ALLOWABLE) WIND SPEED, V_{asd}[6] (mph)		
					Wind Exposure Category		
					B	C	D
3/8	Vertical Siding	16[2]	6[4]	133	200	180	180
	Lap Siding Installed Vertically	5[3]	12[5]	133	200	180	180
		6[3]		120	200	180	160
		7[3]		103	200	160	160
		8[3]		90	180	160	150
		9-1/2[3]		76	160	150	130
		12[3]		60	150	130	120
7/16	Lap Siding Installed Vertically	6[3]	12[5]	120	200	180	160
		7[3]		103	200	160	160
		8[3]		90	180	160	150
		9-1/2[3]		76	160	150	130
		12[3]		60	150	130	120

For **SI:** 1 inch = 25.4 mm, 1 psf = 47.88 Pa, 1 mph = 1.6 kph.

[1]Siding shall be installed over 7/16 Performance Category or thicker wood structural panel sheathing meeting DOC PS 1 or DOC PS 2 requirements.
[2]Vertical Siding installed in accordance with Figures 2, 5, and 6.
[3]Lap Siding installed vertically in accordance with Figure 1 through 4.
[4]Fasteners must be hot dipped galvanized ring shank, carbon steel nails with a minimum shank diameter of 0.092 inch. Length shall be long enough to fully penetrate wood structural panel wall sheathing. Fasteners must be spaced a maximum of 6 inches o.c. along the siding perimeter in accordance with Figures 5 and 6.
[5]Fasteners must be hot dipped galvanized ring shank, carbon steel nails with a minimum shank diameter of 0.092 inch. Length shall be long enough to fully penetrate wood structural panel wall sheathing. Fasteners must be spaced a maximum of 12 inches o.c. along alternating edges of the length of the trim/batten in accordance with Figures 1 and 4.
[6]Three-second-gust; based on wind pressures acting toward and away from building surfaces, at 30-feet height in Zone 5 with smallest effective area per Chapter 26 of ASCE 7-10 and ASCE 7-16, and Section 1609.1.1 of the 2012/2015/2018 IBC.

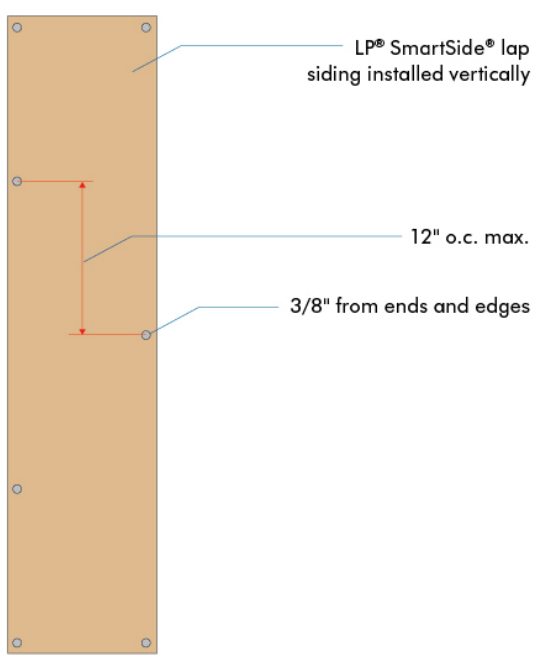

FIGURE 1—LAP SIDING INSTALLED VERTICALLY

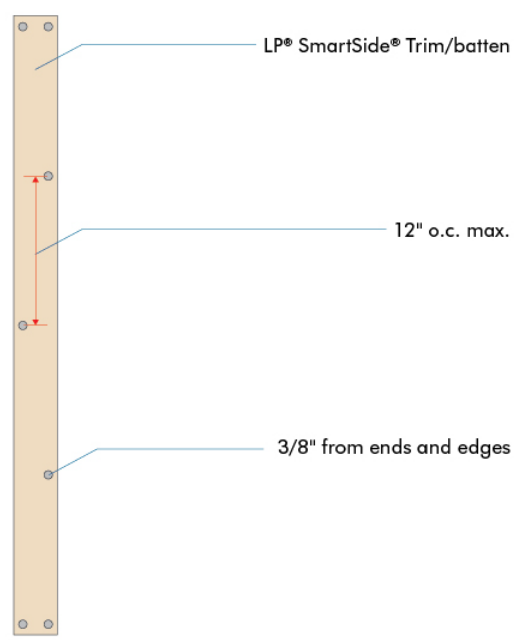

FIGURE 2—LP® SMARTSIDE® TRIM/BATTEN

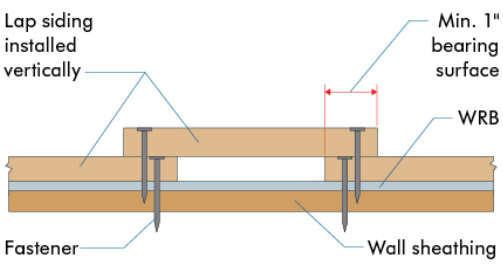

FIGURE 3—LAP SIDING ATTACHMENT DETAIL

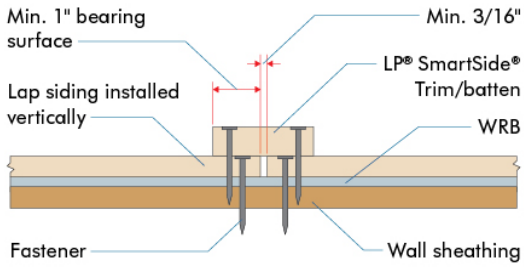

FIGURE 4—LP® SMARTSIDE® TRIM/BATTEN ATTACHMENT DETAIL

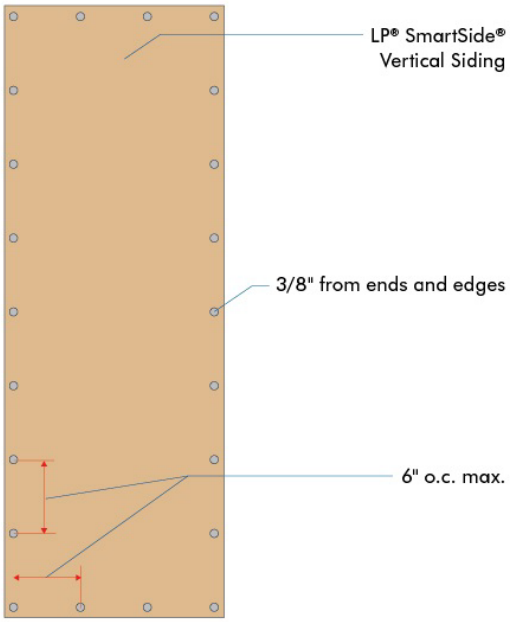

FIGURE 5—VERTICAL SIDING

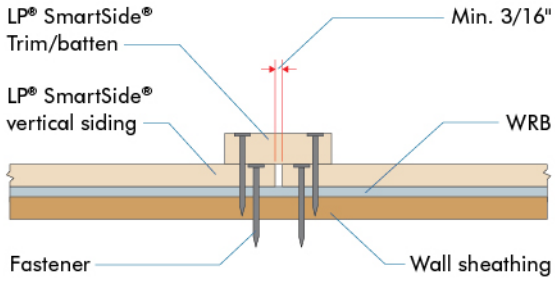

FIGURE 6—VERTICAL SIDING ATTACHMENT DETAIL

DISCLAIMER

APA Product Report® is a trademark of *APA – The Engineered Wood Association,* Tacoma, Washington. ICC-ES Evaluation Report is a trademark of ICC Evaluation Service, LLC (ICC-ES). The information contained herein is based on the product evaluation in accordance with the references noted in this report. Neither ICC-ES, nor APA or its members make any warranty, expressed or implied, or assume any legal liability or responsibility for the use, application of, and/or reference to opinions, findings, conclusions, or recommendations included in this report. The joint ICC-ES/APA Evaluation Reports are not to be construed as representing aesthetics or any other attributes not specifically addressed, nor are they to be construed as an endorsement of the subject of the report or a recommendation for its use. Consult the local jurisdiction or design professional to assure compliance with code, construction, and performance requirements. Because neither APA, nor ICC-ES, has any control over quality of workmanship or the conditions under which engineered wood products are used, it cannot accept responsibility for product performance or designs as actually constructed.

DIVISION: 06 00 00—WOOD, PLASTICS AND COMPOSITES
Section: 06 16 00—Sheathing

DIVISION: 07 00 00—THERMAL AND MOISTURE PROTECTION
Section: 07 46 23—Wood Siding

REPORT HOLDER:

LOUISIANA-PACIFIC CORPORATION

EVALUATION SUBJECT:

LP® SMARTSIDE® STRAND SUBSTRATE LAP SIDING AND LP® SMARTSIDE® STRAND SUBSTRATE PANEL SIDING

1.0 REPORT PURPOSE AND SCOPE

Purpose:

The purpose of this evaluation report supplement is to indicate that LP® SmartSide® Strand Substrate Lap Siding and LP® SmartSide® Strand Substrate Panel Siding, described in ICC-ES evaluation report ESR-1301, have also been evaluated for compliance with the codes noted below as adopted by the Los Angeles Department of Building and Safety (LADBS).

Applicable code editions:

- 2020 *City of Los Angeles Building Code* (LABC)
- 2020 *City of Los Angeles Residential Code* (LARC)

2.0 CONCLUSIONS

The LP® SmartSide® Strand Substrate Lap Siding and LP® SmartSide® Strand Substrate Panel Siding, described in Sections 2.0 through 7.0 of the evaluation report ESR-1301, comply with the LABC Chapters 14 and 23, and the LARC, and are subject to the conditions of use described in this supplement.

3.0 CONDITIONS OF USE

The LP® SmartSide® Strand Substrate Lap Siding and LP® SmartSide® Strand Substrate Panel Siding described in this evaluation report supplement must comply with all of the following conditions:

- All applicable sections in the evaluation report ESR-1301.
- The design, installation, conditions of use and identification are in accordance with the 2018 *International Building Code®* (IBC) and 2018 International Residential Code (IRC) provisions noted in the evaluation report ESR-1301.
- The design, installation and inspection are in accordance with additional requirements of LABC Chapters 16 and 17, as applicable.
- Panels must be used only in locations were combustible materials are permitted in the 2020 LABC.
- Under the LARC, an engineered design in accordance with LARC Section R301.1.3 must be submitted.
- The LP® SmartSide® Strand Substrate Lap Siding and LP® SmartSide® Strand Substrate Panel Siding have not been evaluated under the LABC Chapter 7A or the LARC Section R337 for use in the exterior design and construction of new buildings located in any Fire Hazard Severity Zone within State Responsibility Areas of any Wildland – Urban Interface Area.

This supplement expires concurrently with the evaluation report, issued February 2020 and revised April 2020

ICC-ES Evaluation Reports are not to be construed as representing aesthetics or any other attributes not specifically addressed, nor are they to be construed as an endorsement of the subject of the report or a recommendation for its use. There is no warranty by ICC Evaluation Service, LLC, express or implied, as to any finding or other matter in this report, or as to any product covered by the report.

Copyright © 2020 ICC Evaluation Service, LLC. All rights reserved.

Technical Note No. 028

LP® SmartSide® 38 Series Strand Substrate Vertical Siding for Board & Batten Applications

This Technical Note provides guidance for the application of LP® SmartSide® 38 Series Strand Substrate Vertical Siding for Board & Batten Applications. Additional application information may be found in LP® SmartSide® Strand Substrate Panel Siding Application Instructions and LP® SmartSide® Trim and Fascia Application Instructions.

LP SmartSide 38 Series Strand Substrate Vertical Siding may be installed in Board & Batten application, according to the following requirements.

- Siding must be installed over a minimum 7/16 Category wood structural panels with an APA Trademark that contains the consensus Standard DOC PS 1 or PS 2.
    - Exception: LP® FlameBlock® Fire-Rated OSB Sheathing
- Vertical Siding or Batten may only span one plate-to-plate. Due to plate shrinkage, each vertical application is not to span beyond one floor to ceiling distance, or one floor to top of gable distance. *(See Figures 5a & 5b)*
- Vertical Siding SHALL NOT be installed horizontally.
- Battens may be a minimum 0.5 x 1.5 inches (13 x 38 mm) wide [actual size].
    - Caution: When selecting a batten less than 2.5 inches (64 mm) wide [actual size] it may be difficult for batten to conceal nail heads on vertical siding.
        - Visible nail heads that are not covered by battens are an aesthetic issue and not covered by the LP SmartSide Limited Warranty.
- Must be installed over non-compressible drainable housewrap to provide drainage behind siding.
- Finish/Paint:
    - Prime and paint all field cuts and exposed ends following the paint manufacturer's instructions
- Vertical Siding must be spaced a minimum of 3/16 inch (5 mm). *(See Figure 4a & 4b)*
- Sealant is not required in any vertical joint covered by Batten and backed by a WRB.
- Minimum Fastener Type for **Vertical Siding**:
    - Corrosion Resistant = hot-dip galvanized (ASTM A153) or equivalent
    - Ring Shank
    - Shank diameter = 0.092 inch
    - Length = fastener shall be long enough to fully penetrate wood structural panel sheathing by at least 1/4 inch (6 mm). Ensure that the ring shanks of the nail fully engage the sheathing.
        - Caution: Choose a fastener length that will not damage wiring or other utilities in the exterior wall assembly

ADDRESS 414 Union Street
Suite 2000 Nashville, TN
TEL (615) 986-5600
FAX (615) 986-5666
WEB www.lpcorp.com

Date Created: 03/15/2017
Last Revision: 05/02/2020

BUILD WITH US.™

- Fastener Placement for **Vertical Siding**:
  - Maximum 3/8 inch (10 mm) from ends and edges *(See Figure 3c)*
- Fastener Spacing for **Vertical Siding**:
  - Fastened a maximum of 6 inches (152 mm) o.c. along the perimeter *(See Figure 3c)*
- Minimum Fastener Type for **Batten**:
  - Corrosion Resistant = hot-dip galvanized (ASTM A153) or equivalent
  - Ring Shank
    - Ring Shank nails provide superior resistance to fastener pull-through. In Hurricane-Prone Regions or locations where negative wind loads are a concern, ring shank nails should be used.
    - Trim nails may be used in other locations with the following cautions: Do not overdrive or counter sink the fastener, nail flush with the surface of batten. Batten nails shall be installed per the length, placement, spacing and quantity requirements listed in this document. Detachment of batten is not covered by the LP SmartSide limited warranty whether ring shank or trim nails are used.
  - Shank diameter = 0.092 inch
  - Length = fastener shall be long enough to fully penetrate Vertical Siding by at least 1/4 inch (6 mm) *(See Figure 4a & 4b)*
    - Caution: Choose a fastener length that will not damage wiring or other utilities in the exterior wall assembly
- Fastener Placement for **Battens**:
  - Maximum 3/8 inch (10 mm) from ends and edges *(See Figure 3a or 3b)*
- Fastener Spacing for **Battens**:
  - Fastened with two nails at both ends, with additional fasteners spaced a max. of 12 inches (305 mm) o.c. along alternating edges the length of the batten *(See Figure 3a)*
    - Exception: For battens less than 2.5 inches (64 mm) wide, 1 nail is required at each end, with additional fasteners spaced a maximum of 24 inches (305 mm) o.c. along alternating edges *(See Figure 3b)*
- **DO NOT bridge floors with Vertical Siding or Battens.** *(See Figure 5a)*
  - Create a horizontal joint between floors.
  - Horizontal joint must be flashed with sloped metal Z-flashing
- Vertical Siding must be applied in a manner that will not allow moisture intrusion or water buildup.
- All other requirements of the LP® SmartSide® Panel Siding Application Instructions and LP® SmartSide® Trim and Fascia Application Instructions must be followed.
- When using SmartSide siding with other siding products like stucco, brick or cultured stone veneers it is important to use a capillary break so moisture absorbed into those veneers cannot be transferred into siding. Separate SmartSide siding from veneers with minimum 3/8 inch (10 mm) space for horizontal or vertical joints, use sealant. Backer rod may be required by the sealant manufacturer. *(See Figure 6)*

ADDRESS 414 Union Street
Suite 2000 Nashville, TN
TEL (615) 986-5600
FAX (615) 986-5666
WEB www.lpcorp.com

Date Created: 03/15/2017
Last Revision: 05/02/2020

BUILD WITH US.™

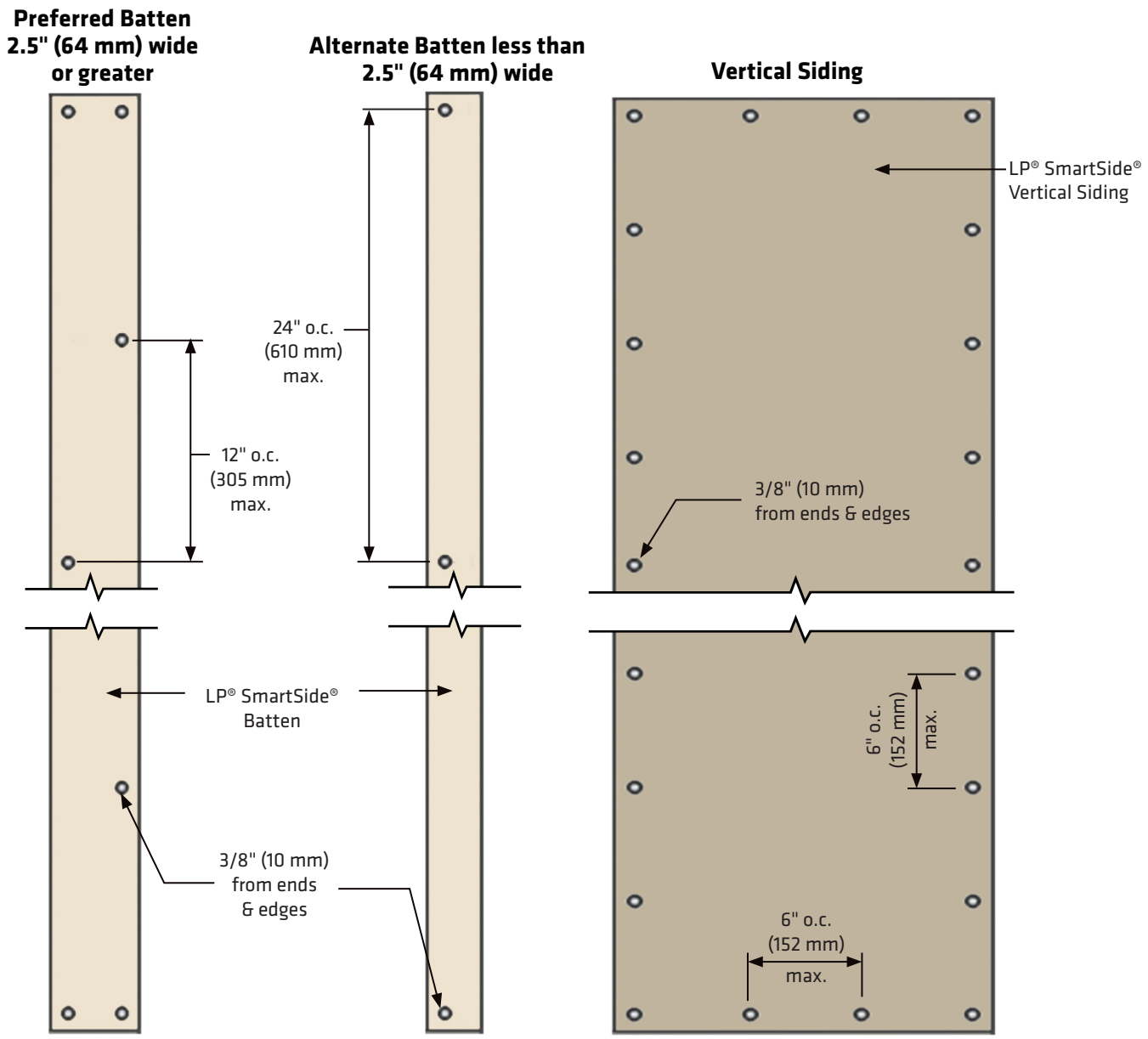

Figure 3a **Figure 3b** **Figure 3c**

ADDRESS 414 Union Street
Suite 2000 Nashville, TN
TEL (615) 986-5600
FAX (615) 986-5666
WEB www.lpcorp.com

BUILD WITH US.™

Date Created: 03/15/2017
Last Revision: 05/02/2020

Preferred Batten Attachment 2.5" (64 mm) wide or greater

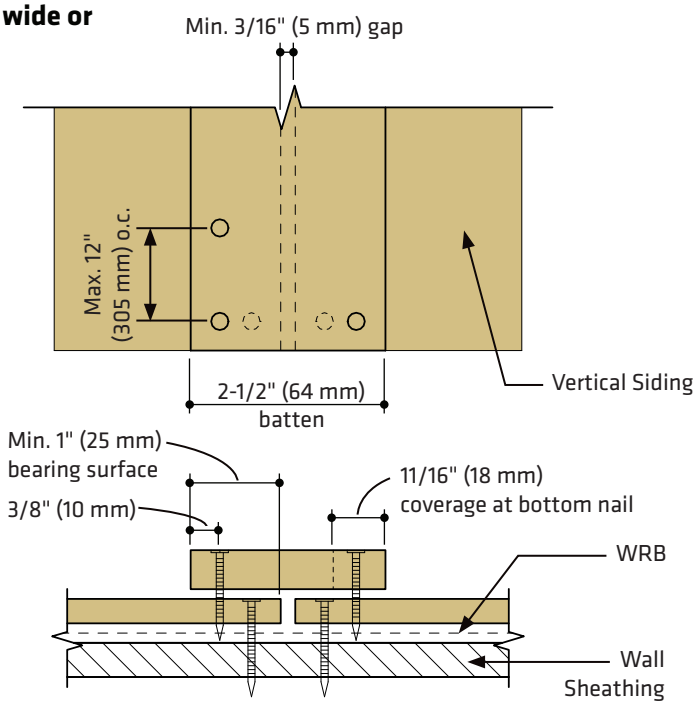

Figure 4a

Alternate Batten Attachment less than 2.5" (64 mm) wide

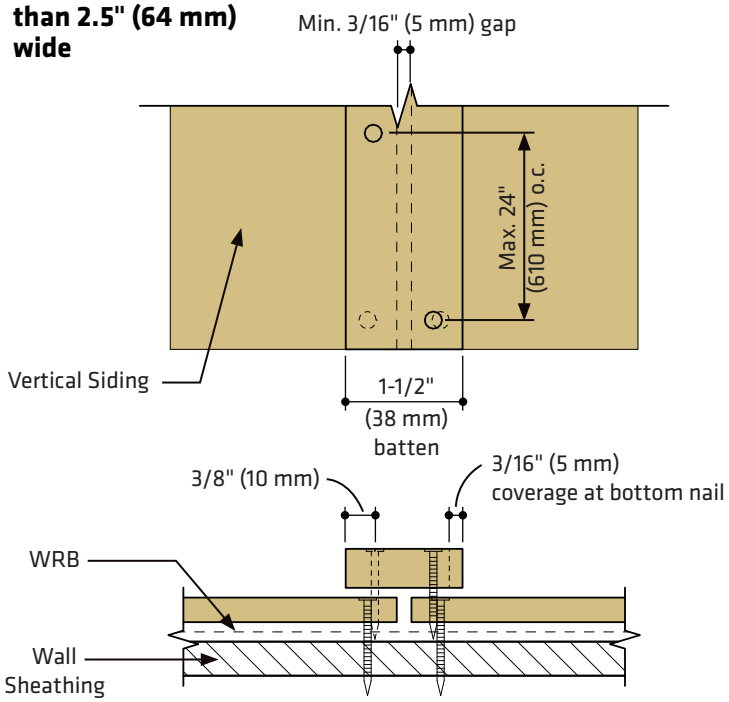

Figure 4b

ADDRESS 414 Union Street
Suite 2000 Nashville, TN
TEL (615) 986-5600
FAX (615) 986-5666
WEB www.lpcorp.com

BUILD WITH US.™

Date Created: 03/15/2017
Last Revision: 05/02/2020

Two Story
One Floor to Ceiling
Horizontal Joint Between Floors

One Story
One Plate-to-Plate

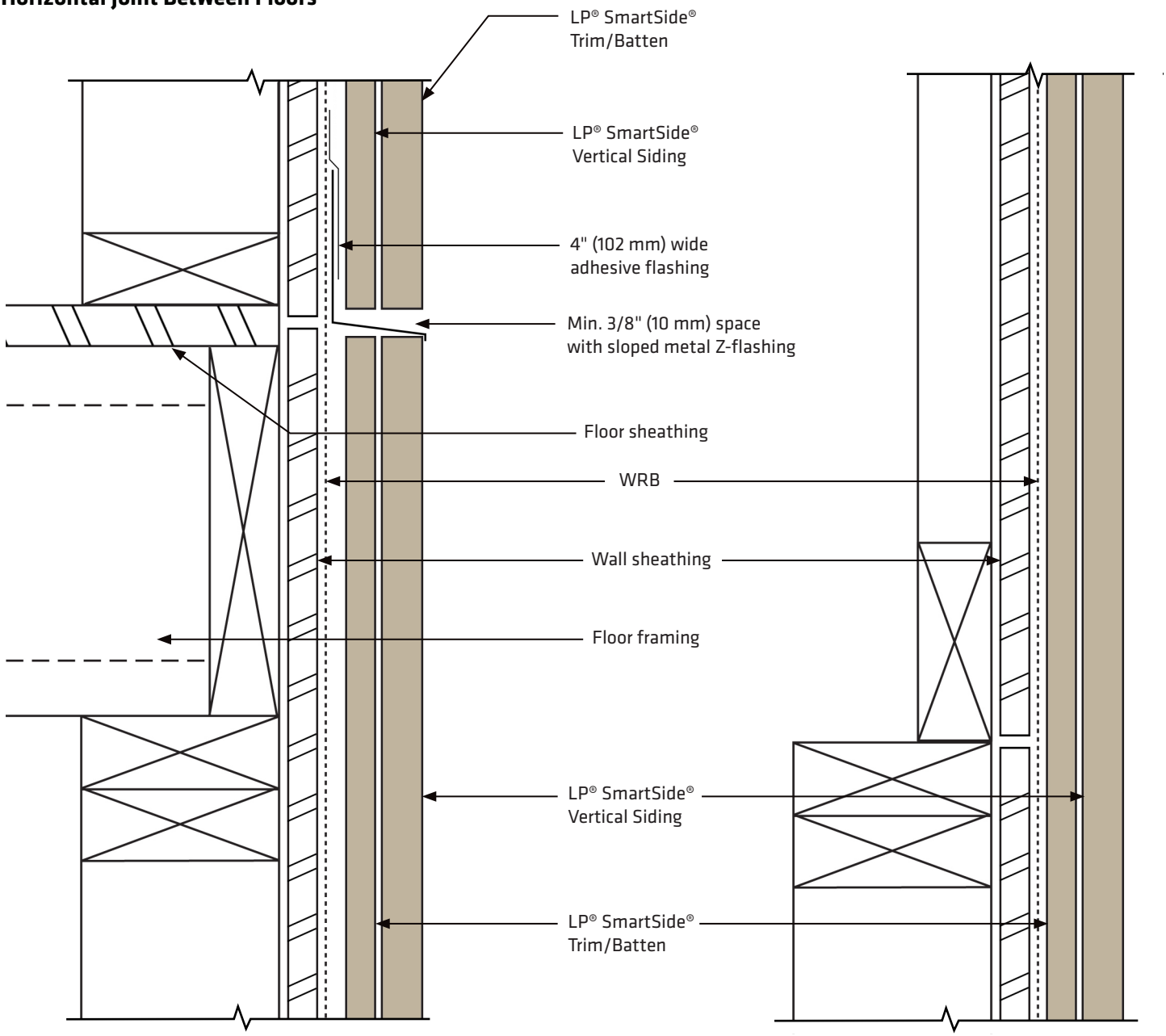

Figure 5a

Figure 5b

Date Created: 03/15/2017
Last Revision: 05/02/2020

ADDRESS 414 Union Street
Suite 2000 Nashville, TN
TEL (615) 986-5600
FAX (615) 986-5666
WEB www.lpcorp.com

BUILD WITH US.™

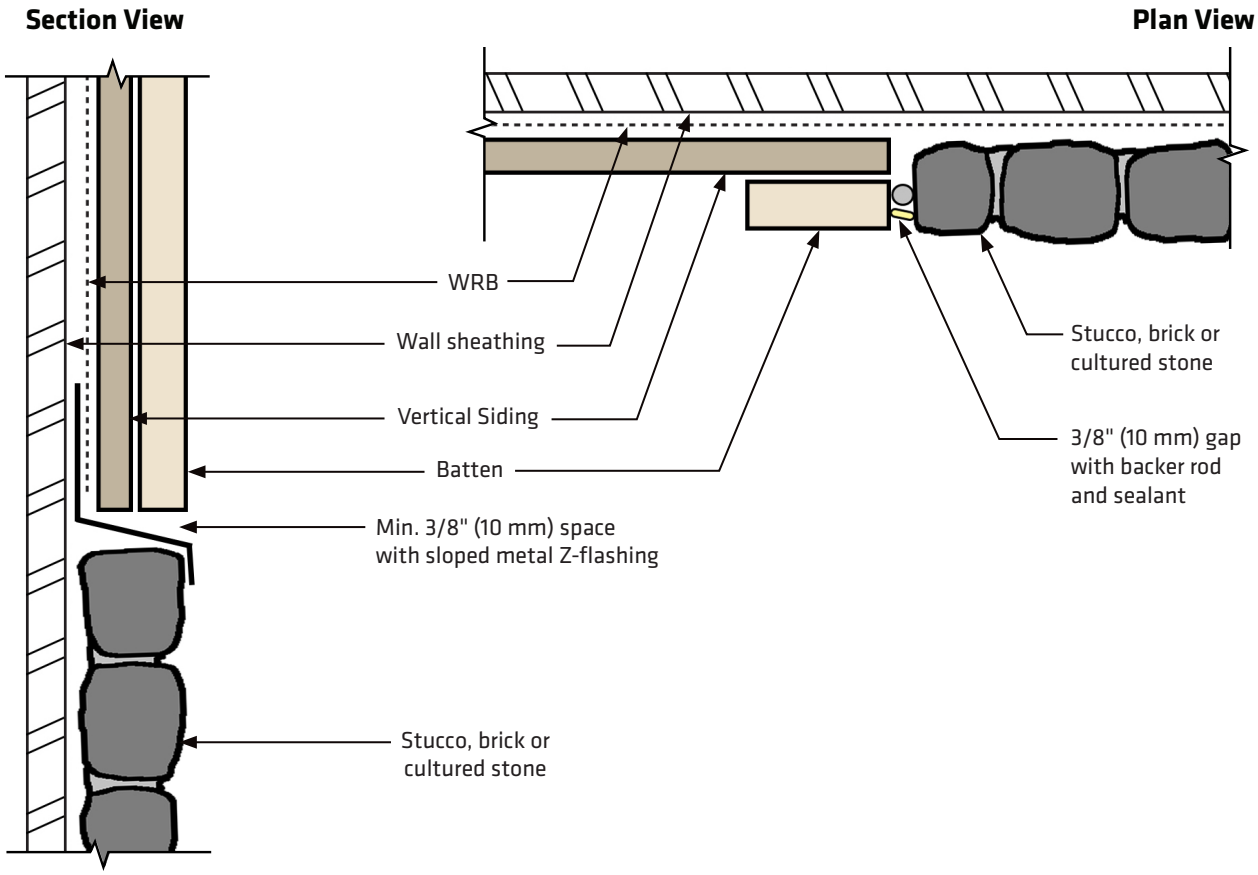

Figure 6

Date Created: 03/15/2017
Last Revision: 05/02/2020

ADDRESS 414 Union Street
Suite 2000 Nashville, TN
TEL (615) 986-5600
FAX (615) 986-5666
WEB www.lpcorp.com

BUILD WITH US.™

Technical Note No. 014

Installing LP® SmartSide® Trim and Lap Siding on Concrete or Masonry Walls over Furring Strips (V_{ult} Wind Speeds)

This Technical Note is an addendum to the LP® SmartSide® Trim and Fascia, and LP® SmartSide® Lap siding Application Instructions ("Instructions"). It is intended to provide an alternative fastening option for LP SmartSide trim and lap siding on concrete or masonry walls over furring strips. The Instructions remain effective except as may be modified by this Note. Refer to the Instructions for all other aspects of product installation.

Trim and lap siding may be installed on concrete or masonry walls over furring strips:

- Trim and lap siding must be installed over a minimum 1x4 nominal size Southern Pine furring strips with a specific gravity greater than or equal to 0.55.
    - Install furring strips no more than 16"o.c. in wind speed areas less than or equal to 200 MPH[1]
- Siding shall be installed to safely support all loads, including wind loads, of the locally adopted building codes. The installation of siding shall result in a system that provides a load path that meets the requirements for the transfer of loads from their point of origin through the load-resisting elements to the structure. The mechanical connection of the furring strip to the concrete or masonry structure is the responsibility of a design professional. LP assumes no liability for any loss or damage caused by the design of the mechanical connection of the furring strip to the concrete or masonry structure and is expressly released by the purchaser or owner from any such loss or liability.
- Minimum Fastener Type:
    - Corrosion Resistant – Hot Dipped Galvanized or equal (ASTM A153)[2]
    - Ring Shank[3]
    - Shank diameter = 0.120 inch
    - Head diameter = 0.270 inch
    - Length = fastener shall fully penetrate a minimum 1/2 inch into nailable furring **Caution:** fastener shall not bottom out on masonry wall leaving the fastener head less than flush with the face of trim or siding.

ADDRESS 414 Union Street
Suite 2000
Nashville, TN
TEL (615) 986-5600
FAX (615) 986-5666
WEB www.lpcorp.com

Date Created: 12/04/2015
Last Revision: 10/09/2017

BUILD WITH US.™

- The IRC and Florida Residential Code require a water-resistant barrier be used on all exterior walls, except over concrete or masonry walls per Exception 1 in Section R703.1.1 of both Codes. LP always requires the use of a WRB behind LP® SmartSide® products. LP has no responsibility for any damage arising from a failure to use a WRB.

Lap Siding

- Limitations:
  - For use with Strand substrate lap (all widths) and/or Fiber substrate lap (up to 8 inches wide only)
  - Excluding Cedar Shake Fiber Lap, Bold Profiles Fiber Lap, Self-Aligning Fiber Lap, and SmartLock™ Strand Lap
- Fastening Requirements:
  - Place fasteners 3/4 inch from top edge of lap siding
  - Increase minimum lap siding overlap to 1-1/8 inch
  - Blind nail two fasteners per furring strip (**every 16" o.c.**)

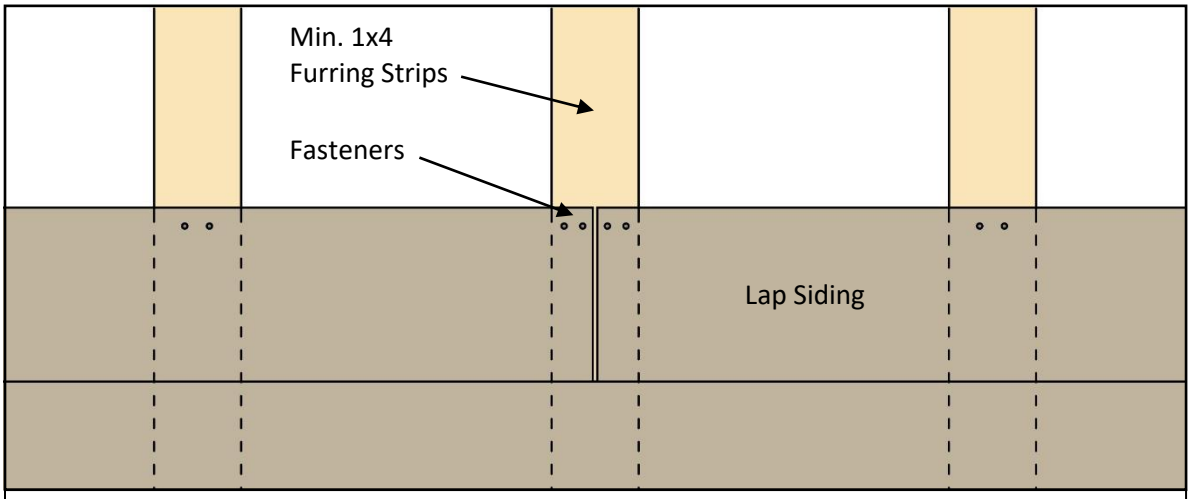

- 2 nails per furring (4 nails at butt joints)
- Nails spaced 3/4" from top edge of lap and 3/8" from ends of lap (approximately 1" apart)
- 1-1/8" min. lap siding overlap.

ADDRESS 414 Union Street
Suite 2000
Nashville, TN
TEL (615) 986-5600
FAX (615) 986-5666
WEB www.lpcorp.com

Date Created: 12/04/2015
Last Revision: 10/09/2017

BUILD WITH US.™

Trim

- Limitations:
  - In Hurricane-Prone Regions or locations where negative wind loads are a concern, box or common nails should be used.
    - Trim nails may be used in Non-Hurricane-Prone Regions with the following cautions: Do not overdrive or counter sink the fastener, nail flush with the surface of trim. Detachment of trim is not covered by the LP® SmartSide® limited warranty whether common, box, or trim nails are used.
- Fastening Requirements:
  - Two fasteners spaced a maximum of every 24 inches o.c. along the length of the trim, or two fasteners at both ends with additional fasteners spaced a maximum of every 12 inches o.c. along alternating edges the length of the trim.
  - Trim under 7 inches wide use a minimum of 2 nails per width. Trim 7 to 12 inches wide use a minimum of 3 nails per width. Trim over 12 inches wide use a minimum of 4 nails per width.

[1] Wind speed is Ultimate Design Wind Speed/ Zone 5/ 10 ft^2/ 30 foot height.
[2] Corrosion resistance and capable of preventing rust, stain and deterioration of the fasteners under normal outdoor environmental conditions for a period of no less than 50 years. For further information or guidance, consult your nail supplier/manufacturer.
[3] Ring shank nails shall be capable of the performance specified in Table 1A Ring-Shank Nail Withdrawal Loads of APA publication TT-109, *Wood Structural Panels Used as Nailable Sheathing* when tested in accordance with ASTM D 1761, *Standard Test Method for Mechanical Fasteners in Wood* and NDS-2015. For further information or guidance, consult your nail supplier/manufacturer.

ADDRESS 414 Union Street
Suite 2000
Nashville, TN
TEL (615) 986-5600
FAX (615) 986-5666
WEB www.lpcorp.com

Date Created: 12/04/2015
Last Revision: 10/09/2017

BUILD WITH US.™